6

Eure!TechFLASH

THE UP-TO-DATE TECHNICAL INSIGHT IN AUTOMOTIVE INNOVATIONS

EDITION 6

RIDE CONTROL *suspension*

IN THIS ISSUE

ad INTERNATIONAL

EureTechFlash is an AD International publication (www.ad-europe.com)

Download all EureTechFlash editions at

www.eurecar.org

THE SUSPENSION SYSTEM FORMS PART OF THE VEHICLE'S ACTIVE SAFETY. IT IS RESPONSIBLE FOR ENSURING THE COMFORT OF THE OCCUPANTS BY PREVENTING OSCILLATIONS IN THE GROUND BEING TRANSMITTED TO THE BODY. IT ALSO ENSURES THAT THE WHEELS REMAIN IN CONTACT WITH THE GROUND SO DYNAMIC CONTROL OF THE VEHICLE CAN BE MAINTAINED.

THE OSCILLATIONS THAT MAY BE APPARENT IN THE VEHICLE MUST BE KEPT WITHIN CERTAIN PARAMETERS AND NOT ALTER THE OCCUPANT'S STATE OF MIND. IT IS ESTIMATED THAT A PERSON'S COMFORT LEVEL IS 1 TO 2 OSCILLATIONS PER SECOND. ABOVE THESE VALUES, THE NERVOUS SYSTEM BECOMES AGITATED AND BELOW THEM, A PERSON MAY FEEL SICK.

SUSPENSION SYSTEMS AND ELEMENTS

A suspension system comprises various elements which can form different architectures.

Suspension elements are understood as those that are located between the sprung mass, i.e. the engine, body, chassis, etc. and the unsprung mass, i.e. the axles and wheels.

The suspension system is composed of elastic elements, absorption elements and the wheels.

The elastic elements have the job of supporting the vehicle to isolate it from the movements due to imperfections in the road surface.

The absorption elements are essential for complementing the above as they reduce their oscillations, while the wheels, in addition to allowing the vehicle to move, provide elasticity through the tyres. They are the car's first suspension element.

Different architectures can be formed depending on the elements used and their arrangement, among which are:

The rigid axle, which uses a single axle to join the two wheels at its ends. Usually used on the rear wheels.

Independent suspension, each wheel mounted on the same axle is fully independent of the other.

Special, this is the improved version developed from the two above.

Finally, **active suspension** is a suspension type that has been updated with electronic assistance which achieves more precise results.

ELASTIC SUSPENSION ELEMENTS

There are various alternatives, below you will see some that are most used in cars, the helical spring being the most common.

Helical spring

This is the elastic element that is fitted between the wheels and the chassis and uses different types of joint. It supports the weight of the vehicle and absorbs the unevenness of the ground.

It is a steel rod coiled in a spiral. Its ends are made flat to achieve good seating. It works in torsion, twisting with the external forces exerted on it.

Torsion bar

The bar is secured at one of its ends so, when an external torque is applied, it twists slightly due to its elasticity and opposes the applied torque with a torque reaction of equal value and in the opposite direction.

It has the advantage of being compact and therefore does not take up much space.

It is used most frequently on the rear axle.

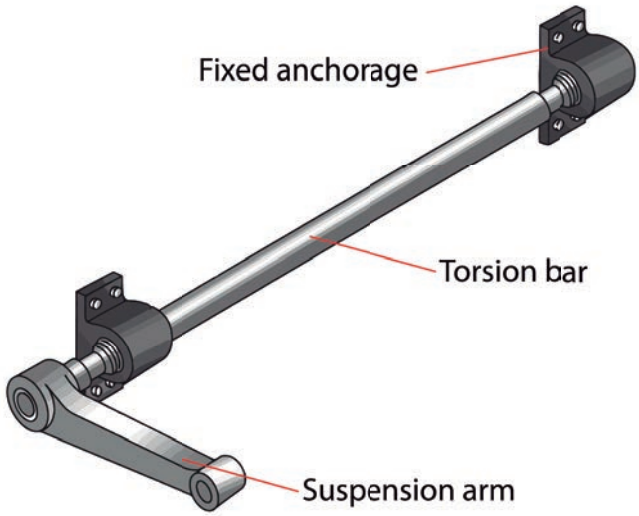

Pneumatic block

This is another option among the elastic elements, it is normally found in vehicles equipped with a height correction system. There are two types, hydro-pneumatic, which works with oil and gas, and air.

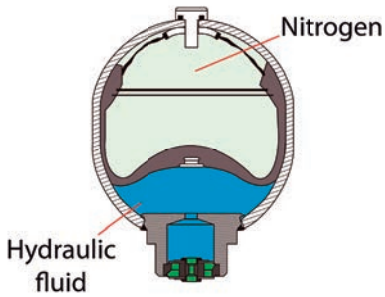

Vehicles with hydro-pneumatic or air suspension do not use steel springs as an elastic element. These are replaced by spheres containing nitrogen gas in the hydro-pneumatic suspension systems mainly fitted by the manufacturer Citroën.

Air suspension systems are equipped with air springs that replace the steel spring.

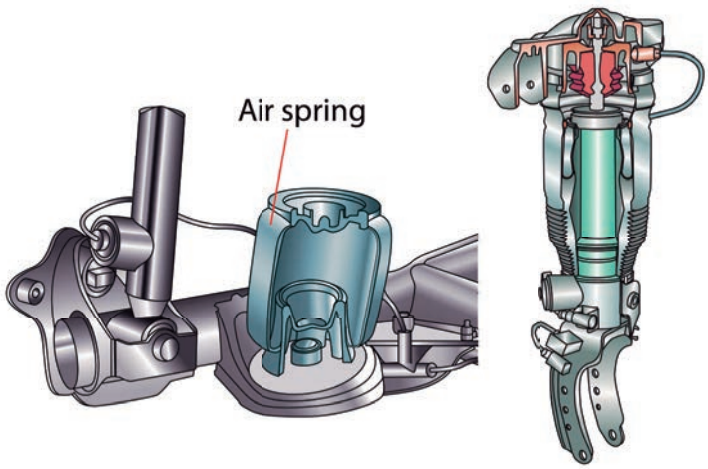

ABSORPTION AND STABILITY ELEMENTS

Dampers

These absorb the spring oscillations to prevent them being transmitted to the body.

The damper (or shock absorber) that is most used in the car is the telescopic, hydraulic type. These function on the fluid displacement principle, both in the compression and extension cycle.

It basically consists of a piston that moves inside a cylinder full of oil. This piston has valves through which the oil circulates from one chamber to another. The passage of oil is controlled to regulate the damping of the oscillations.

Gas dampers are an improvement on the above systems. To operate, these also have a pressurised nitrogen gas inside them at a constant pressure on the hydraulic fluid. This method results in a quieter damper and a faster response.

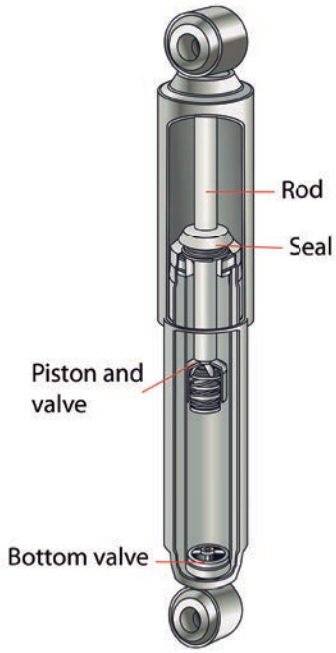

Anti-roll bar

Its job is to keep the vehicle as horizontal as possible when driving on bends or on an uneven surface.

It consists of a spring steel bar located between the two arms of the wheels on the same axle, and it is anchored to the body at its centre. When driving around a bend, one wheel tends to go down and the other to go up which creates a torsion effect in the bar that absorbs the force and prevents the body leaning to one side. The same effect occurs when one of the wheels encounters a pot-hole or obstacle.

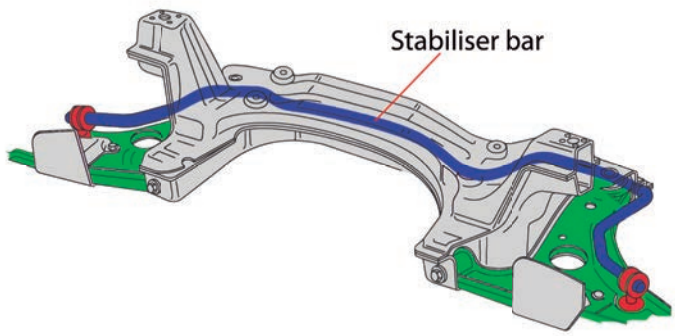

Double wishbone suspension

These are fitted to vehicles with independent suspension, they join the body to the wheel. Its job is to hold the knuckle, improve the steering of the wheel and allow it to oscillate. The suspension arms can be mounted transversely, obliquely, longitudinally or be multi-link.

ACTIVE SUSPENSION SYSTEMS

In an ideal suspension system, the position of the wheels would not change with respect to the body. The purpose of the various active suspension systems is to control the firmness of the damping. In hydraulic and air systems, the height of the vehicle is also controlled depending on variations in weight and road conditions. Electronic and electro-mechanical systems are required for this. Three examples of this type of suspension are described below.

Hidractive 3 Citroën C5

This type of suspension allows the distance to the ground to be varied automatically depending on the speed. There are two positions, sport and comfort, which automatically change the firmness of the damping. These changes give greater stability, due to the lowering of the centre of gravity by 15 mm at the front and 11 at the back, which reduces fuel consumption. On poor roads, the system can raise the height of the vehicle by up to 13 mm.

Hydractive 3 facilitates choosing between the two suspension options, it allows switching, alternately and in real time, from a soft setting, which gives priority to comfort, to a hard one to improve stability, while taking into consideration the driving style and the road profile at all times.

The main elements involved in the system are:

- An integrated hydro-electronic block -**1**-, which is the brain of the system. An electric motor operates the hydraulic pump located in the self-contained pressure generator. This motor functions independently of the engine speed and, only if required, at a speed of 2300 rpm. The self-contained pressure generator groups together all the flow, safety and anti-dive functions, the hydraulic pump and four solenoid valves.
- Front supporting elements -**2**-.
- Front -**3**- and rear -**6**- stiffness regulators with their spheres.
- Electric height sensors -**4**- and -**7**- joined to the anti-roll bars.
- Rear hydro-pneumatic cylinders -**5**-.
- A control unit -**8**-.
- A sensor -**9**- that measures the steering wheel angle and its velocity of angular displacement.
- A hydraulic fluid reservoir -**10**-.
- An accelerator pedal position sensor -**11**-.
- A braking pressure sensor -**12**-, which provides information on the pressure exerted on the brake pedal.
- A simplified hydraulic network.

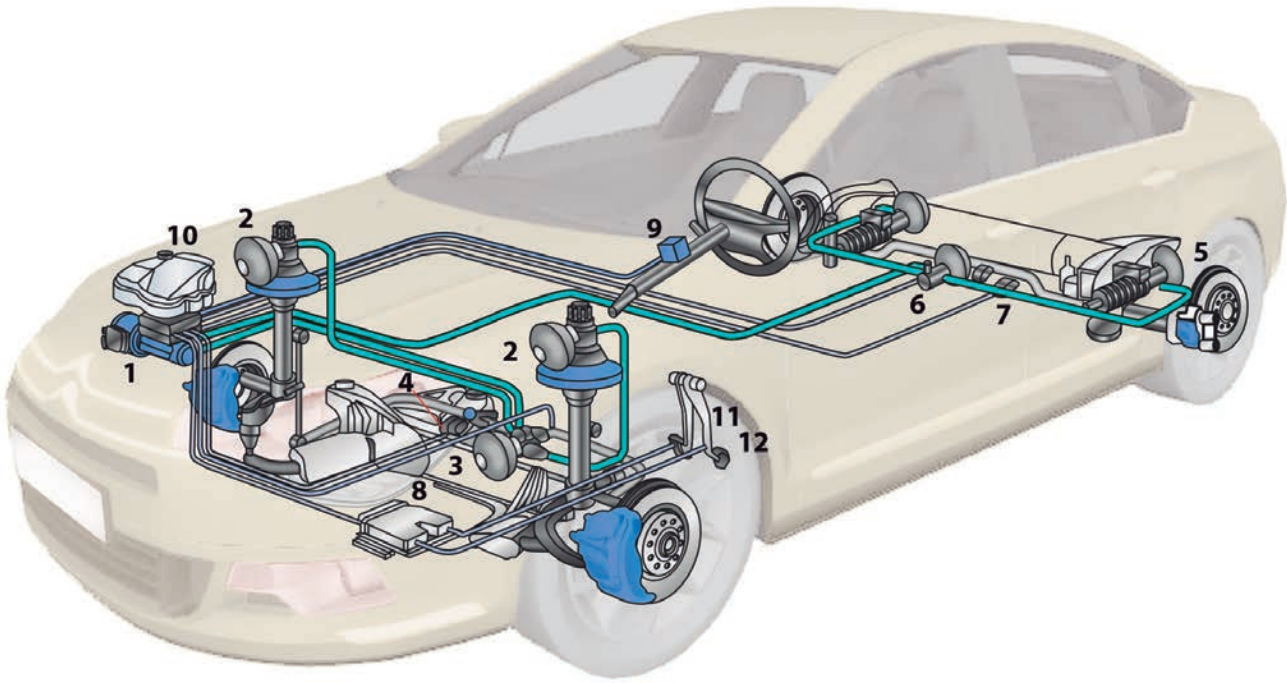

The operating principle of these systems is based on a variable height correction that depends on the amount of oil that enters the pistons, and on the absorption of the suspension oscillations through the compression and expansion of the gas inside the sphere.

These spheres are essentially hydraulic accumulators that have two chambers separated by a membrane, one of these is charged with nitrogen gas, while the other is linked to the hydraulic circuit. The nitrogen pressure is kept constant over time, which means its properties are fully maintained.

Each axle is equipped with a third sphere for flexibility, and with a stiffness regulator for the damping laws and the switching of the additional sphere. The principle consists of isolating these elements for sport mode and in activating them from comfort mode, this is based on information received from the height sensors, the steering wheel, the brake pressure and engine speed, through the multiplexing network.

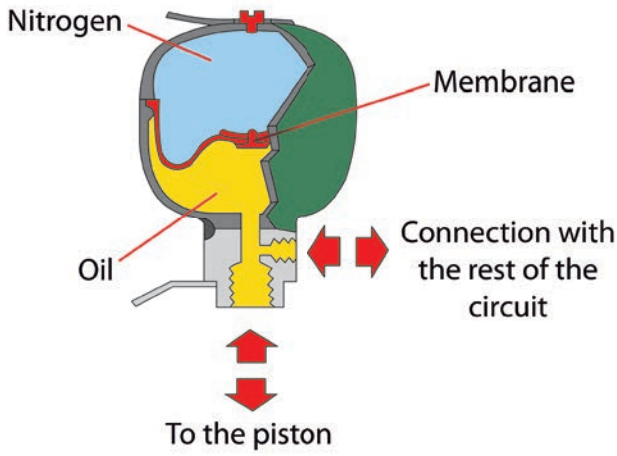

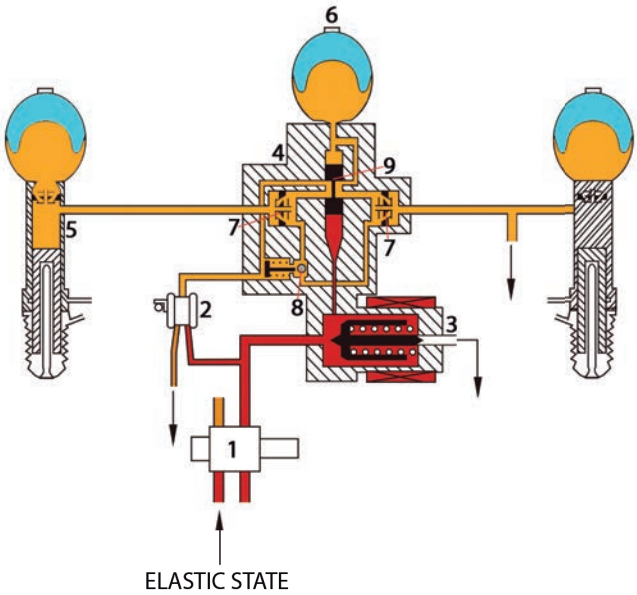

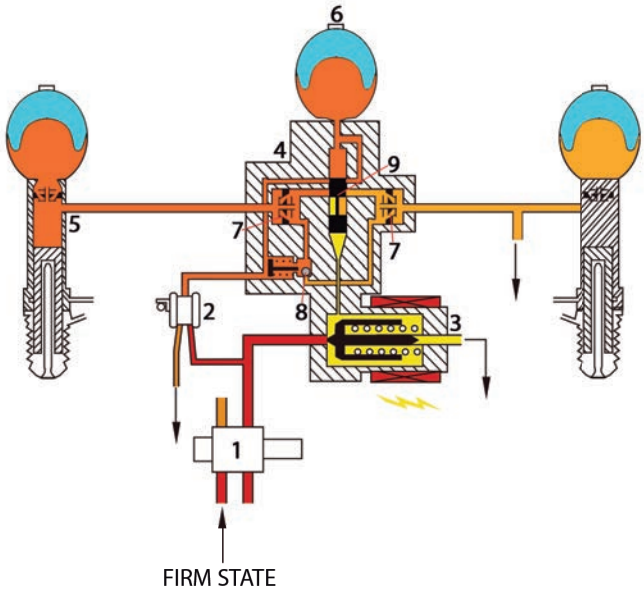

1	Safety valve	6	Additional sphere
2	Height corrector	7	Shock absorber
3	Electrovalve	8	Ball valve
4	Stiffness regulator	9	Shaft
5	Suspension cylinders		

Audi A8 air suspension

Air suspension allows the body to be adjusted to different heights in accordance with running requirements, it also helps the suspension and damping to adapt to the road surface and driving style.

This suspension is noted for its high flexibility, good oscillation absorption and for the self-regulation of the system that allows the distance between the chassis and the surface of the road to be maintained irrespective of the vehicle's load.

With the aid of vertical acceleration sensors on the body, this suspension model recognises the road condition. The driving style can be ascertained based on the vehicle's speed and the steering angle. Three different damping programs can be selected, auto, comfort and sport. Each one is activated depending on road conditions and the driver's wishes, and contributes to driving safety and comfort. Air suspension with adaptive damping also allows each damper to be controlled independently.

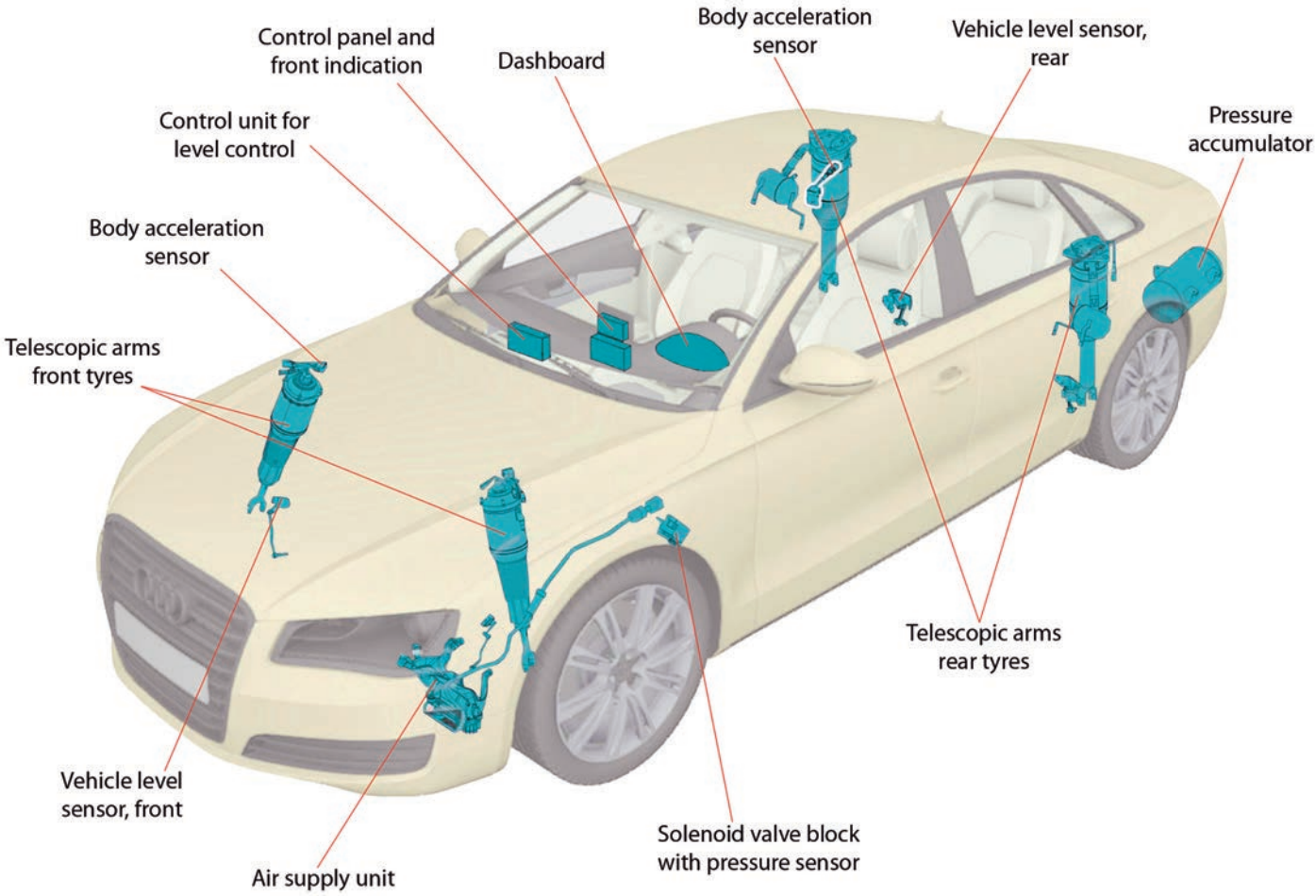

Primarily, air suspension is made up of an air supply unit that generates and builds up the pressure necessary for operating the circuit, level sensors for height regulation, air springs and a warning light on the instrument cluster.

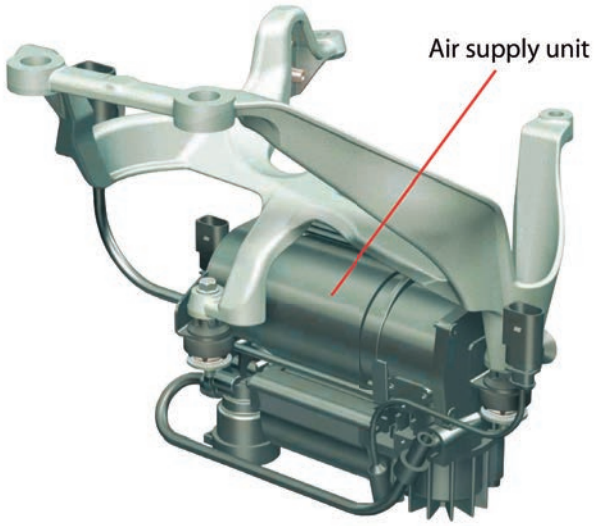

The air supply unit includes a control unit, a compressor with filter drier and discharge valves, a relay for the compressor and some suspension valves.

The supply unit supplies air to the air springs through the valve unit until the vehicle level is adjusted. The control unit is informed of this level by the measurements provided by the level sensors.

Each suspension block is controlled by a solenoid valve, which opens and closes the link with the circuit. The suspension solenoid valves are electrically energised in pairs, front axle and rear axle.

Two operation times are taken into consideration for the operation of the circuit. One of these is the pressurisation time, when the air is compressed to provide the flow to the solenoid valves that control the air springs, the excess air goes to the accumulator through its solenoid valve.

The other operation time is the depressurisation period. Both the suspension block solenoid valves and the discharge solenoid valves are opened. This latter valve allows the air to flow to the outside after crossing the additional silencer and the air filter.

Sensor, management and actuator diagram

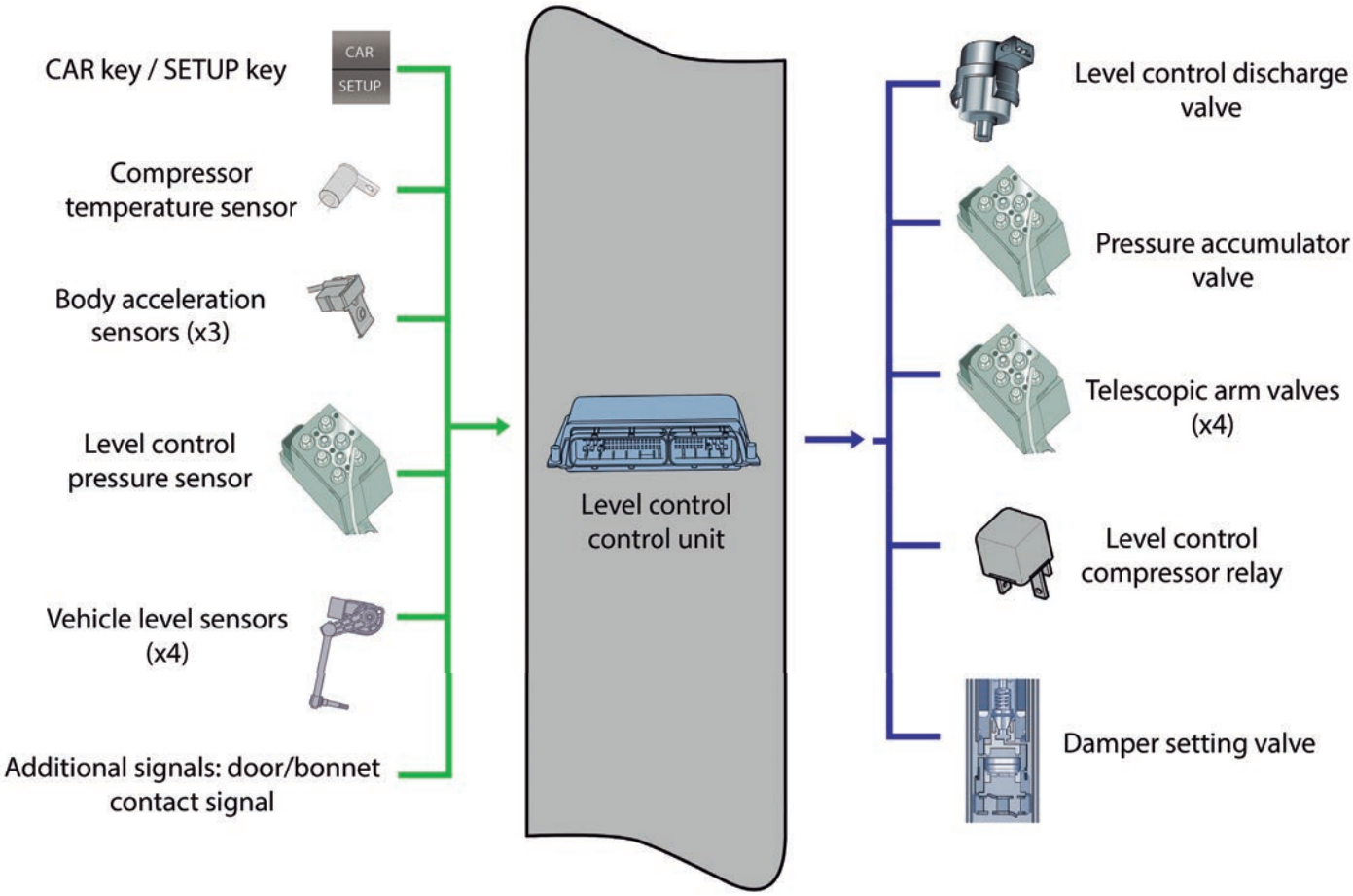

Adaptive (DCC) VW Golf

This suspension system adapts damping to the road conditions. By means of a button, you can choose between three different damping programs, normal, sport and comfort.

In Normal mode, the damper behaves in a manner between soft and firm. Damping becomes firmer in sport mode. In comfort mode, damping is softer.

The damping adapts automatically in accordance with the vehicle's running conditions in order to eliminate possible rolling and pitching of the car. Moreover on activating sport mode, the steering is controlled with more sporting characteristics to achieve better precision in vehicle handling.

Essentially, this suspension system is made up of the following components: four dampers adjusted by means of a family of characteristic curves, a gateway control unit that forms an interface with the vehicle's CAN bus systems, an electronic damping control unit, three sensors for measuring the body movements and another three sensors for measuring the vertical travel of the wheels.

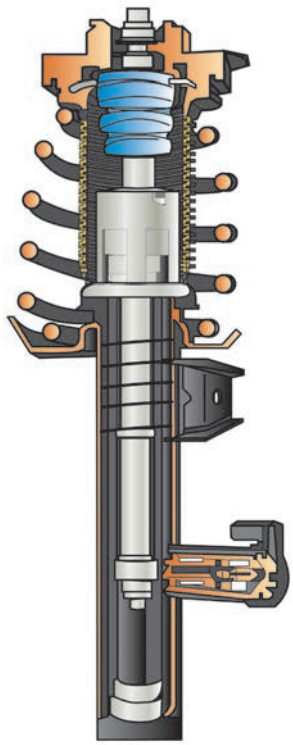

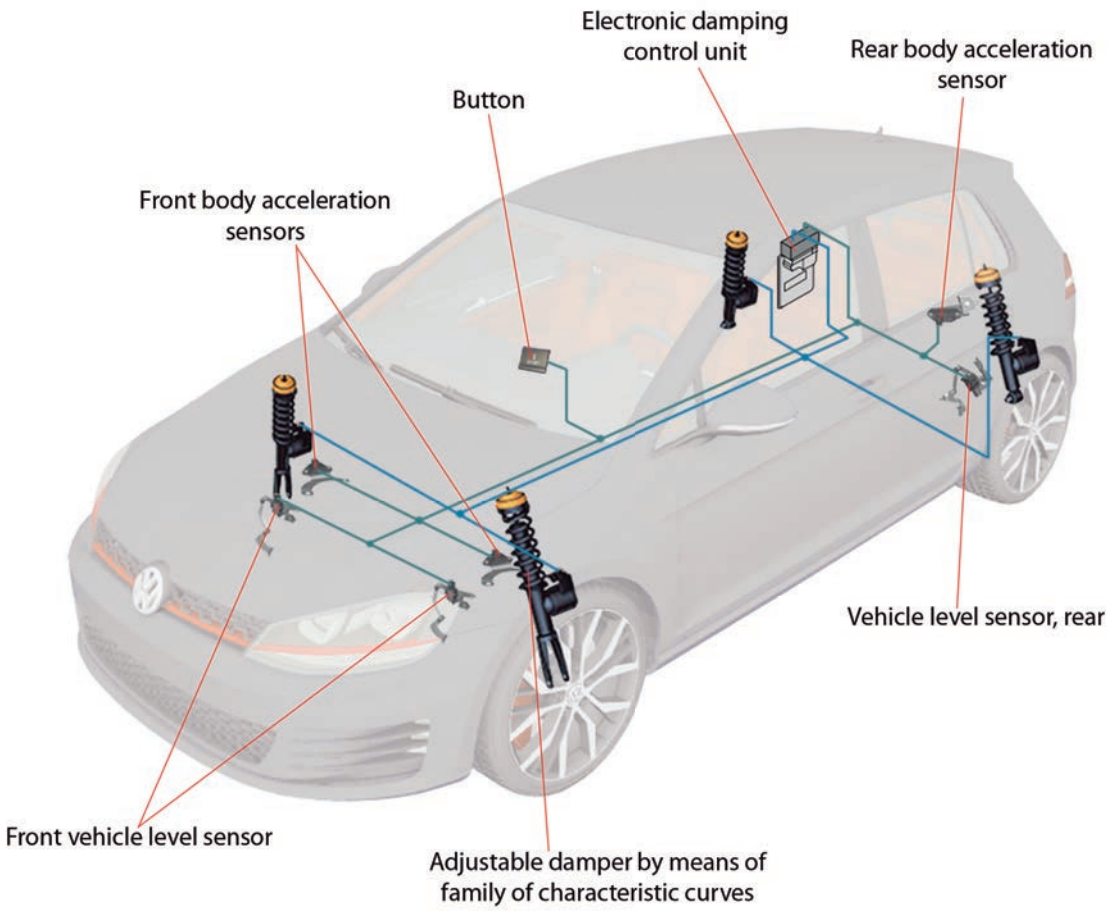

The firmness of the suspension is changed by means of variable dampers. These have a similar structure to the twin tube dampers, but the variable dampers incorporate solenoid control valves. These are energised by the control unit in accordance with the driver's wishes, the road conditions or by the dynamic conditions to which the vehicle is subjected. For this, the control unit takes into consideration the information received from the various sensors strategically distributed around the vehicle.

Sensor, management and actuator diagram

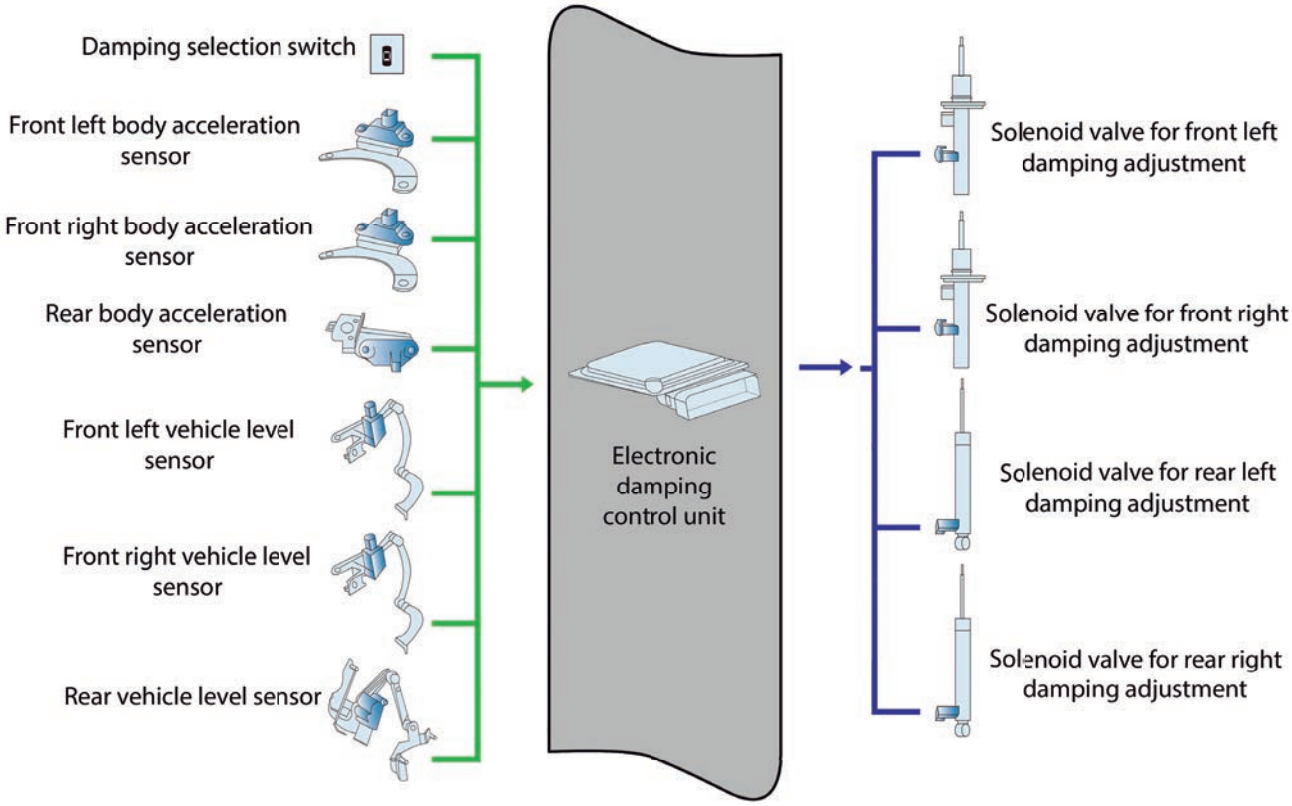

Eure!Car®

CERTIFIED MASTERCLASSES

certified training in car technology

www.eurecar.org

BOSCH · Continental ContiTech · EXIDE TECHNOLOGIES · FEDERAL-MOGUL MOTORPARTS · Gates · HELLA · INA · KYB Our Precision, Your Advantage · LuK · MANN FILTER MANN-FILTER – Perfect parts. Perfect service. · NGK SPARK PLUGS NTK TECHNICAL CERAMICS NGK SPARK PLUG EUROPE GmbH · PHILIPS · SKF · TENNECO · TRW · Valeo · VARTA · ZF

COMMON FAILURES

The mechanical elements that make up the suspension system are subjected to continuous fatigue, wear, can seize or even break. For this reason, it is essential to carry out the periodic servicing and follow the manufacturer's recommendations.

Below are some of the most frequent faults that can occur in the main suspension components.

Shock absorber

- Oil leaks.
- Unusual noise.
- Breakage or deformation

- Check that the damper is fully sealed, a leaking damper is less effective. Any damage suffered by the damper rod can result in loss of oil, therefore the boots and rubber stop should be checked for damage.
- The noise can sound like a rattle or whistle. Any damage to the rod can affect the oil sealing. As above, the condition of the boots and rubber stop should be checked for any damage. On other occasions, the noise can be caused by a crack or deformation of the damper fixings.
- Deformation or breakage of a damper is generally caused by knocks, their poor installation or the fixings being in poor condition.

- In the event of a leak in the damper, it must be replaced along with the elements that have caused it, whether boots or rubber stops.
- If the damper is in poor condition, replace it.
- If a damper is broken, deformed or in poor condition, it must be replaced and the anchorages on the body and suspension arms checked.
- Always replace both dampers on one axle.

Spring

The problems that a spring can have are mainly corrosion, breakage and a reduction in height due to fatigue.

The condition of the spring and its seat must be checked. Friction of the spring with its seat and damage resulting from chippings lead to the detachment of the protective coating. Once the spring is exposed it becomes easily corroded by moisture. Breakages are mainly due to the effects of stress resulting from the compression and extension of the spring. On detecting that the height of the spring has reduced, check its dimensions with those of the manufacturer.

If the corrosion on the spring is light, it must be protected with special paint. While if it is serious or the spring is in a poor condition, out of tolerance or broken, it must be replaced.

Torsion bar

The most frequent anomalies affecting the torsion bar are play at its fixing points, deformation and breakage.

Visually check the condition of the torsion bar for knocks, cracks, etc. Check whether the splines are in good condition, and if necessary use a lever to check the play.

If there is play, the bars and wishbones must be changed. If there is deformation, cracks or other physical damage to the torsion bar, it must be replaced with a new one.

Stabilising bar

The faults that an anti-roll bar may have are play in its fixings, deformation due to external knocks and breakage due to fatigue (rare).

Visually check the condition of the anti-roll bar and that of the fixing mounts. If necessary, use a lever to check the play.

In case of play, the damaged mounts must be replaced. If the anti-roll bar is deformed, it must be replaced by a new one.

Double wishbone suspension

The main problems that occur are related to the rubber bushing and suspension ball joints. Play can occur in these components, they can dry out and even break. Suspension arms can deform as a result of heavy impacts.

Visually check the condition of the rubber bushing and the ball joint covers. It is advisable to use a lever to check the play. Also check that the wishbones are not deformed.

In case of breakage or play in the rubber bushing, it must be replaced. If there is play in the ball joint, replace it. If the arm is deformed, it must be replaced as it cannot be repaired.

TECHNICAL NOTES

Here we are describing the most common faults in the suspension mechanics and electronics. Depending on the manufacturer and the different models, the number of faults occurring over the years can be considerable.

These faults are selected from the online platform: www.einavts.com. This platform has a series of sections that indicate the make, model, range, affected system and subsystem, these can be selected separately depending on the type of search you wish to carry out.

PSA GROUP

CITROËN C5 (DC_), C5 (RC_), C5 Break (DE_)	
Symptoms	Suspension fluid leak from the rear suspension cylinder. NOTE: This technical note only affects those vehicles that are within a specific chassis number range.
Cause	Sealing defect between the cylinder body and the rubber sealing boot.
Solution	Repair procedure: - Check the condition of the cylinder body sealing ring. - Replace the sealing ring between the rubber boot and the cylinder body with a flange nut. For further information, contact your usual technical consultant. For spare parts consult your usual distributor.

NISSAN

QASHQAI (J10, JJ10)	
Symptoms	Incorrect operation of the rear suspension when used under load or extreme situations.
Cause	Defective welding in the suspension arms.
Solution	Repair procedure: - Check the vehicle's rear suspension arms and see if the welding is correct. - In case of a defect, replace the suspension arm. For further information, contact your usual technical consultant.

VAG GROUP

VW TOUAREG (7LA, 7L6, 7L7)	
Symptoms	00774 - Suspension level sensor, rear left RL - G76. 00775 - Suspension level sensor, right rear RR - G77. 00776 - Suspension level sensor, front left FL - G78. 01769 - Suspension level sensor, front right FR - G289. Suspension system fault message recorded on the instrument cluster display.
Cause	Defect in one or more of the vehicle suspension level sensors.
Solution	Repair procedure: - Remove the suspension level sensor and check the manufacturing date. - Replace the affected sensor in accordance with the DTC in the symptom section if it is within a specific manufacturing date. NOTE: This newsletter only affects vehicles equipped with suspension level sensors manufactured within a specific date. For further information, contact your usual technical consultant. For spare parts consult your usual distributor.

VAG GROUP

AUDI Q7 (4L)	
Symptoms	00142 - 008E - Valve for adjusting the front left damping. Fault in electrical circuit. N336. 00143 - 008F - Valve for adjusting the front right damping. Fault in the electrical circuit. N337. 00144 - 0090 - Valve for adjusting the rear left damping. Fault in the electrical circuit. N338. 00145 - 0091 - Valve for adjusting the rear right damping. Fault in the electrical circuit. N339.
Cause	Defective suspension system control unit.
Solution	Repair procedure: - Check the condition of the wiring and the connections of the suspension system control unit. - Check the valve current (650 mA - 2000 mA) - Check the valve resistance (1.66 Ohm +or- 6% at -30ºC), (2.20 Ohm +or- 6% at 20ºC), (3.61 Ohm +or- 6% at 110ºC). - Read the fault codes in the engine control unit with the diagnostic tool if the valve check values are not correct. - Delete the fault codes recorded in the engine control unit with the diagnostic tool. - Replace the suspension control unit if everything is correct and the fault codes continue to recur. For further information, contact your usual technical consultant.

VAG GROUP

AUDI A6 (4F2), A6 (4G2), A6 Allroad (4FH), A6 Avant (4F5), A8 (4E_), A8 (4H_), Q7 (4L)	
Symptoms	00453 - 01C5 - Functional limitation due to excessive temperature. 01583 - 062F - Leak detected in the system. 01770 - 06EA - Compressor temperature sender, level control - G290. 01772 - 06EC - Level control pressure sender signal cable - G291. 02645 - 0A55 - Lowering valve for the self-levelling suspension. Fault code recorded in the self-levelling suspension control unit (J197). The suspension height level cannot be adjusted manually using the Multimedia Interface (MMI) controls. The following symptom is observed in the workshop: - The suspension height level control compressor continues to operate after switching off the engine and locking the vehicle.
Cause	Possible causes: - Defective power supply relay J403 for the suspension height level control compressor. - Defective relay J403 and suspension height level control compressor.
Solution	Repair procedure: - Check the operation of the compressor for controlling the suspension height level by supplying it with direct current. - Replace the compressor and the relay (J403) if the compressor does not work or if it emits an unusual noise on supplying it with direct current. - Check relay J403 if the compressor noise is normal on supplying it with direct current. - Check the contacts of relay (J403) and replace it.

OPEL

VECTRA C, VECTRA C GTS, VECTRA C Family estate car	
Symptoms	Clicking noise in the front suspension. NOTE: This technical note only affects those vehicles that are within a specific chassis number range.
Cause	Defective suspension spring mount on the damper cup washers.
Solution	Repair procedure: - Remove the vehicle's front suspension assembly. - Extract the suspension springs from the suspension assembly. - Thoroughly clean the suspension springs. - Apply primer to the suspension springs if there is corrosion. - Paint the suspension springs if there is corrosion. - Check the diameter of the damper spring in order to fit a suitable protective cover. - Install a protective cover at the bottom of the suspension spring up to the protective cover stop. For further information, contact your usual technical consultant. For spare parts consult your usual distributor

FORD

FIESTA IV (JA_, JB_), FIESTA V (JH_, JD_)	
Symptoms	Clicking noise in the rear suspension area when the vehicle hit a pothole.
Cause	Defective rear suspension damper top mounts.
Solution	Replace the rear damper top fixing mounts with a correct version. For further information, contact your usual technical consultant. For spare parts consult your usual distributor.

ALFA ROMEO

147 (937)	
Symptoms	Noise coming from the rear suspension.
Cause	The transverse rod bushing rubber has become detached.
Solution	Replace the rear transverse rod with a correct version. For further information, contact your usual technical consultant. For spare parts consult your usual distributor.

an eye on automotive technology

The Eure!TechFlash newsletter is complementary to ADI's training program Eure!Car and has a straightforward mission :

to provide up-to-date technical insight in innovations within the automotive environment.

With technical assistance of AD Technical Centre (Spain and Ireland) and assisted by the leading parts manufacturers, Eure!TechFlash aims to demystify new technologies and make them transparent, in order to stimulate professional repairers to keep pace with technology and to motivate them to continuously invest in technical education.

Eure!TechFlash will be issued 3 to 4 times a year.

Eure!Car®
CERTIFIED MASTERCLASSES

The technical competence level of the mechanic is vital, and in the future may be decisive for the continued existence of the professional repairer.

Eure!Car is an initiative by Autodistribution International, with headquarters in Kortenberg, Belgium (www.ad-europe.com). The Eure!Car program contains a comprehensive series of high-profile technical trainings for professional repairers, which are given by the national AD organizations and their parts distributors in 33 countries.

Visit **www.eurecar.org** for more information or to view the training courses.

industrial partners supporting Eure!Car

BOSCH · Continental ContiTech · EXIDE TECHNOLOGIES · FEDERAL-MOGUL MOTORPARTS · Gates · HELLA · INA · KYB Our Precision, Your Advantage · LuK · MANN FILTER MANN-FILTER – Perfect parts. Perfect service. · NGK SPARK PLUGS NTK TECHNICAL CERAMICS NGK SPARK PLUG EUROPE GmbH · PHILIPS · SKF · TENNECO · TRW · Valeo · VARTA · ZF

ride control - braking