4

Eure!TechFLASH

THE UP-TO-DATE TECHNICAL INSIGHT IN AUTOMOTIVE INNOVATIONS

EDITION 4 / APRIL 2015

STEERING

one of the vehicle's active safety elements

IN THIS ISSUE

INTRODUCTION 2

HYDRAULIC POWER STEERING 3

ELECTRIC POWER STEERING 5

STEERABLE REAR AXLES 10

COMMON FAILURES 12

TECHNICAL NOTES 14

ad INTERNATIONAL

EureTechFlash is an AD International publication (www.ad-europe.com)

Download all EureTechFlash editions at www.eurecar.org

The steering system is made up of a set of mechanisms that orient the front wheels by the turning of the steering wheel located inside the vehicle.
Today, steering is one of the vehicle's active safety elements. It affects the stability of motion because it is designed to prevent any one wheel from being dragged by the others. This is achieved thanks to the alignment in combination with the geometry of the front and rear drive trains.
The direct consequences of stable movement are improved comfort and safety.

In regard to assistance systems during vehicle manoeuvers, evolution has been significant, with hydraulic technology giving way, logically, to electro-mechanical technology.
Steering systems have evolved to improve driving safety and above all, driving comfort. Today there are compact steering systems in which the rear wheels also direct the motion.

Types of Steering

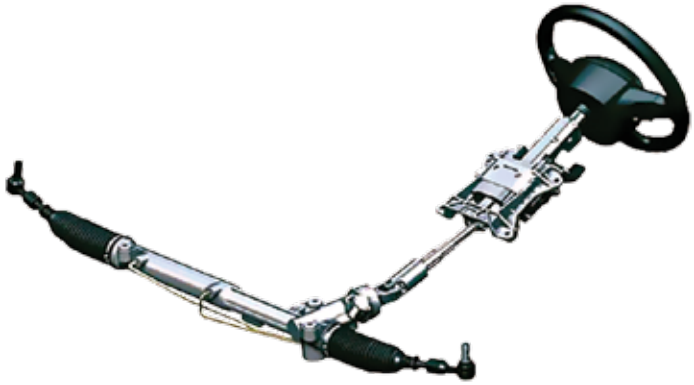

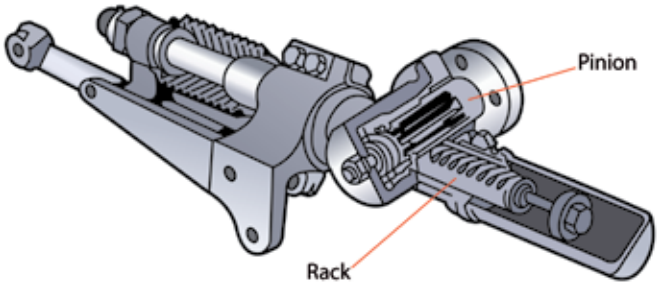

The main elements that are involved in a rack and pinion steering system can be represented, from the action of the driver to the directional movement of the wheels, as the ones described below.

1. **Steering Wheel.** The steering wheel is connected to the steering column. The rotational movement by the driver allows the rotation of the column on the steering rack to in turn transmit a linear movement to the directional wheels of the vehicle.

2. **Steering column.** This is the bar that connects the steering wheel and the steering box, which transmits the rotational torque generated by the driver. It has a structure with a safety configuration to minimize injuries to driver in the case of a head-on collision.

3. **Steering rack or box.** The steering rack is the most significant element in the assembly because it is responsible for transforming the rotational movement generated by the steering wheel into a linear movement on the tie rods, which drive the swivel joints to orient the wheels in the direction desired by the driver.The steering rack is the ideal mechanism for automobiles because of its simple maintenance and low production cost. To reduce the effort required, assistance systems were introduced, and they may now be hydraulic or electro-mechanical, in order to improve driving comfort and safety. The functioning of the steering rack takes into account different factors, such as the reduction ratio and the vehicle's turning radius.

Reduction involves having to turn the steering wheel more or less to achieve an adequate angle. The smaller the **turning radius** of the vehicle, the better it will drive in cities or on winding roads. In this case, the size of the chassis, wheelbase, is a very influential factor.

There are currently two different types of assistance that can be installed in vehicles. The technology that is applied will vary depending on the type of vehicle and its use.

HYDRAULIC POWER STEERING

Mechanically driven hydraulic pump

This steering system incorporates hydraulic power steering. It uses an oil pump mechanically driven by an auxiliary engine belt that transmits the torque to the pump, which creates an oil flow and pressure proportional to the engine speed.

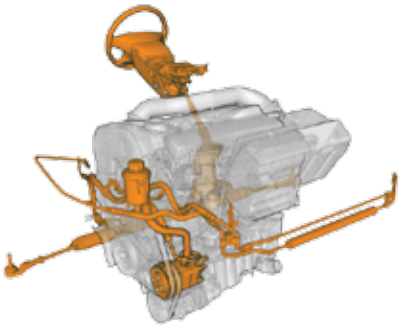

This assistance improves driver comfort during parking manoeuvres and when travelling at low speed. The hydraulic pump incorporates internal pressure control valves, giving more assistance at low engine rpm and reducing it at higher engine speeds when assistance is not required.

The hydraulic system is made up of a series of common elements which are: the hydraulic pump, a cooling circuit, a distributor or rotary valve and a hydraulic cylinder.

The purpose of the hydraulic pump is to generate and supply the oil flow and pressure necessary to provide assistance to the steering rack. The most commonly used pumps are the vane or gear type.

Main Components

Rotary vane pump

Driving the pump causes the vane to open internally by centrifugal force, adapting to the oval shape of the oil chamber. The chamber normally has inlet and outlet ducts. The vanes draw the oil from the suction duct and make it pass through the chamber having different volumes, thus increasing the oil pressure for its use.

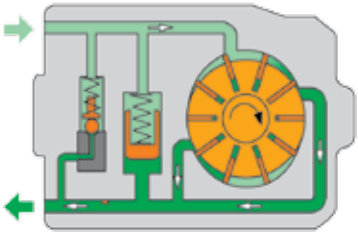

Gear pump

The operating principle is based on two meshed gears, one of them is the drive gear and the other the idler gear. The intermeshing of both gears creates a volume variation and increases the oil pressure.

The fluid is pumped and distributed to the hydraulic system in order to provide the necessary assistance to the steering rack.

There are various hydraulic regulators inside the pump whose purpose is to regulate the oil pressure and maintain it at a constant so there is no loss of assistance, especially during parking manoeuvres.

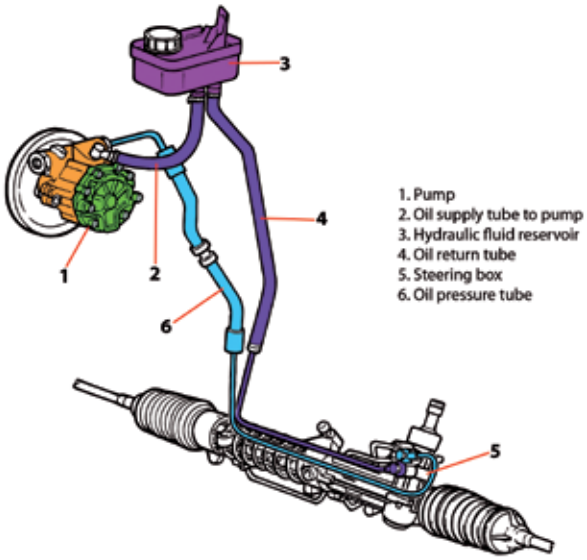

Hydraulic power assistance by mechanical pump drive

The fluid from the hydraulic pump is conducted to the distributor or rotary valve located on top of the rack.

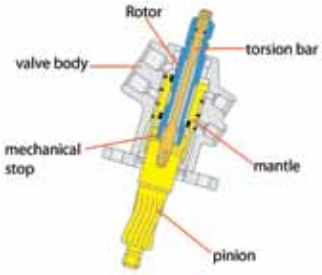

The purpose of this valve is to distribute the fluid to the hydraulic cylinder that is normally found inside the rack.

When assistance is not required, the fluid returns to the reservoir.

Operation

The pistons move axially depending on the flow and pressure of the fluid received due to the required assistance demand.

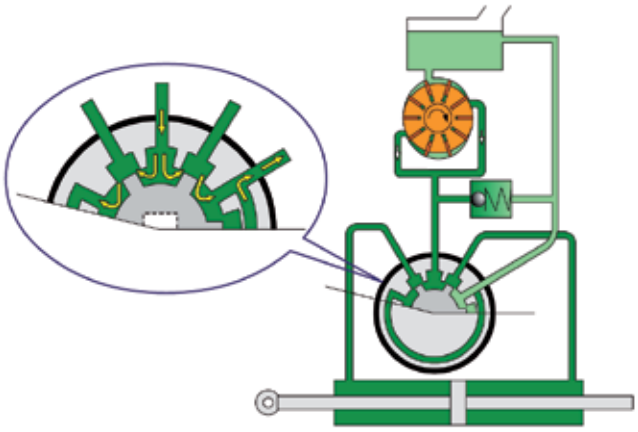

When the steering wheel is at rest, the oil pressure is divided equally in both pistons, cancelling the potential difference so that there is no assistance and the unused fluid returns to the reservoir.

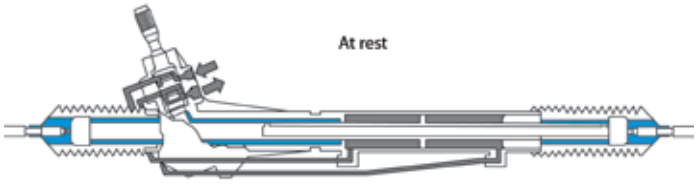

When the steering wheel moves, the torsion bar twists in accordance with the force applied to the steering wheel and the resistance of the wheels to turning.

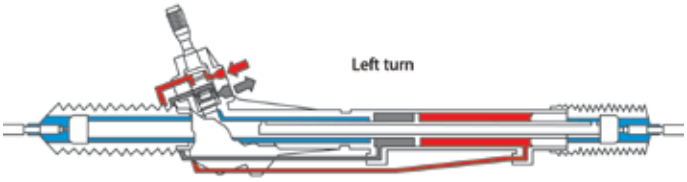

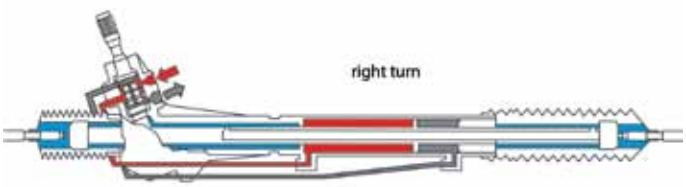

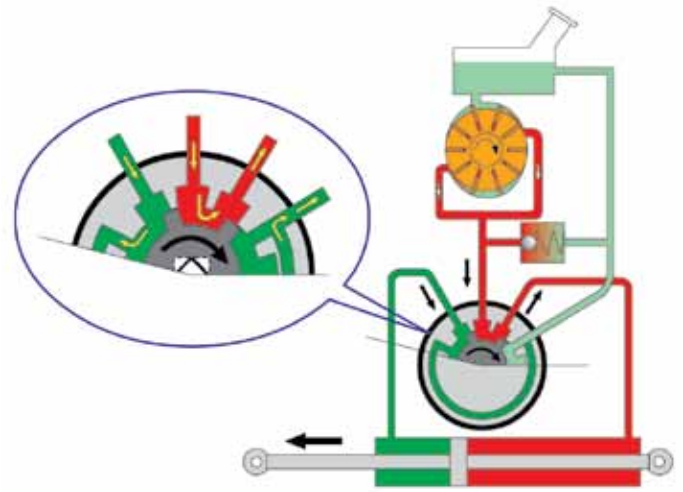

The distributor valve uncovers the fluid paths between the two cylinder chambers causing the pistons to move in accordance with the turn requested by the driver

The distributor valve sends the fluid pressure to the piston that is opposite to the applied turn direction, this causes a hydraulic potential difference in the chambers and thus provides assistance to the torque applied to the steering wheel.

The fluid is constantly recirculating inside the hydraulic circuit in order to conserve the chemical properties of the oil, in order to best ensure steering assistance.

Nowadays, there are pressure control systems for power assisted steering that consist of a solenoid valve located next to the rotary valve body.

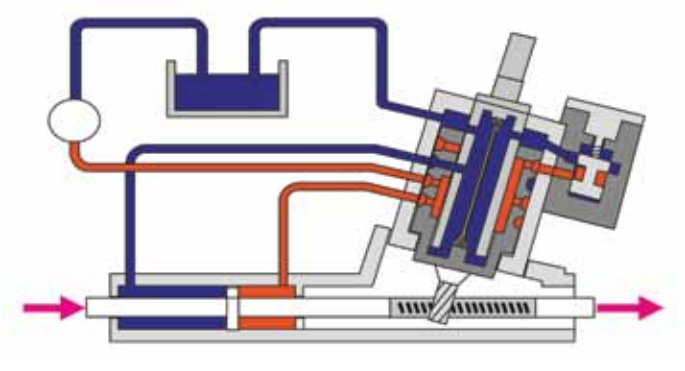

Its purpose is basically to reduce the pressure in one of the chambers by causing an escape of fluid to the circuit return. This allows the pressure to be adjusted to each circumstance depending on other data obtained by the steering control unit.

Electrically driven hydraulic pump

The structure of this power steering system is similar to conventional power assisted steering. In this system, the oil pressure and flow necessary to drive the hydraulic power steering is generated by an electric pump that operates independently from the engine.

This system currently has a control unit that receives signals from different sensors, as well as information from the Multiplexing Network. It will regulate the power signal to the electric pump depending on this information.

The advantages of electrohydraulic power steering are as follows:

- Greater comfort and easy handling during repeated manoeuvres.
- It improves active safety, as variation in the assistance increases the handling accuracy.
- It optimises the number of components as it uses signals from other systems through the Multiplexing Network.
- It simplifies and reduces the size of the system, as the majority of components are grouped together in the electrohydraulic assembly, making it easier to position in the engine compartment.
- Fuel saving, the electrohydraulic assembly operates independently from the engine and there is no belt drive.
- The electronic management system allows maximum flow at idle, thus increasing assistance during parking manoeuvres.

Main components

The electrohydraulic power steering is made up of three different actuation units: electrical, hydraulic and mechanical.

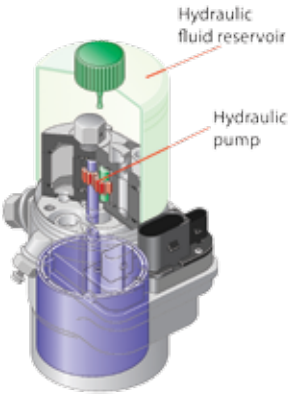

Electric unit

The main components in this unit are the electric motor, the coantrol unit and the various sensors, which normally form a compact block.

Hydraulic unit

The purpose of the hydraulic unit components is to generate the oil flow and pressure at all times to provide the assistance requested by the driver. The unit is made up of the hydraulic pump, the pressure limiter valve and the oil reservoir, which together form a single assembly.

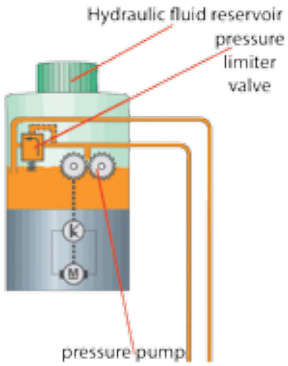

The operating principle of a hydraulic gear pump is based on an electric motor, the rotor of which is the drive gear which moves the idler gear. The oil is drawn through a chamber directly from the reservoir and is pumped to the hydraulic circuit.

The oil outlet pressure is controlled and limited by a valve in order to prevent damage that could be caused by excess pressure.

The purpose of the rotary valve is to distribute the oil from the hydraulic block to the assistance cylinder chambers or to the reservoir depending on the driver's demand.

Mechanical unit

The design and operation of the rack's mechanical components is similar to that of power steering with a hydraulic pump.

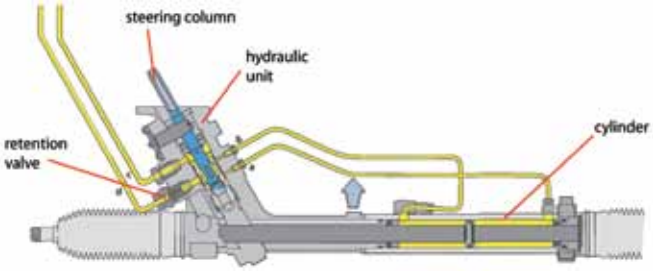

ELECTRIC POWER STEERING

Power assistance on the steering rack

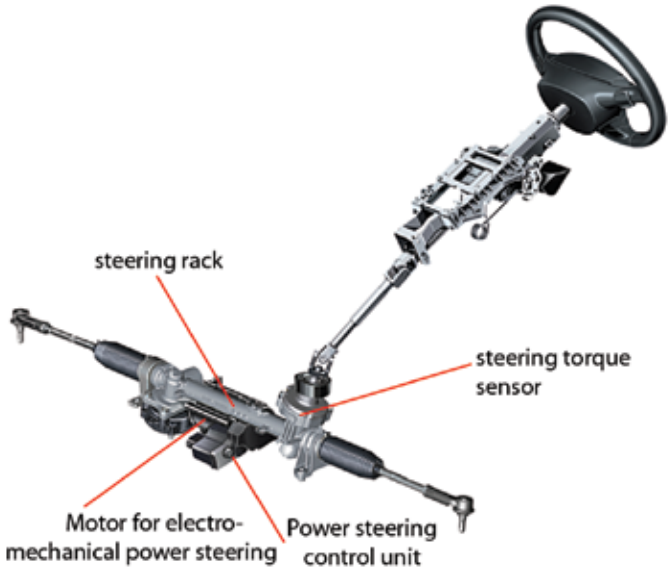

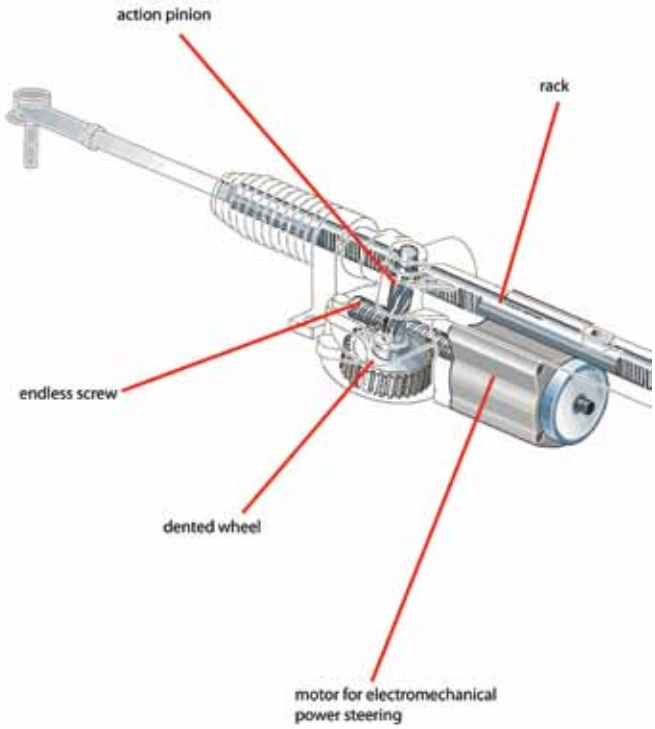

Technologically, power steering systems have evolved continuously and hydraulic circuits are slowly being phased out due to the evolution of electro-mechanical systems managed by control units.

The use of electric power steering reduces environmental impact because, in addition to saving fuel, it does not use hydraulic oil as the

electric motor only runs when the driver turns the steering wheel.

The electrical system is activated automatically depending on the driver's needs while driving the vehicle or during parking manoeuvres; in other words, it is only activated when additional assistance is required. The magnitude of this assistance will depend on the speed of the vehicle and the steering angle.

The assistance is generated by an electric motor located in the steering rack itself. The motor transfers the assistance torque to the steering rack through a geared drive pinion on the steering rack bar.

The control unit excites the electric motor depending on the assistance needs requested by the driver at any given time, so that it reduces the effort generated by the turning manoeuvre, precisely transferring the movement to the steering wheel during driving.

The advantages of electrically-driven power steering with respect to hydraulic power steering are obvious because it eliminates the need for the components that generate hydraulic pressure and the network of tubing. It also reduces the environmental impact because it does not require hydraulic fluid.
The system as a whole occupies a smaller space because all of the components are coupled directly on the steering rack itself. The noise generated by the operation of the system is reduced considerably, along with fuel consumption, because the electric motor only operates when the driver needs it.

Management of electro-mechanical assistance, components and functions

The steering control unit determines the assistance torque based on different magnitudes, such as:

- The signal of the torque applied to the steering wheel
- The signal of steering angle
- The vehicle's speed
- The speed of the internal combustion engine
- The set of characteristics adapted by the control unit

Based on these parameters, the management of the assistance adjusts the excitation of the electric motor at any given time, assisting the driver to ensure that the manoeuvre is executed as correctly as possible.
For the system to function properly, the steering control unit uses the signals from the steering torque sensor, steering angle sensor, rotor speed sensor, and the thermal sensor. It also communicates via the multiplexed network with other control units to provide or exchange data required for management of the system.

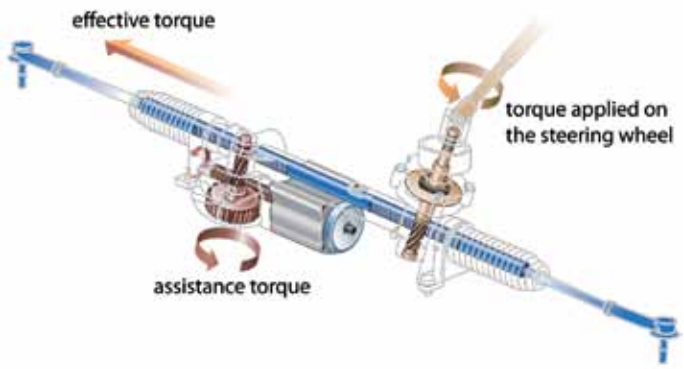

Synoptic diagram of the power steering

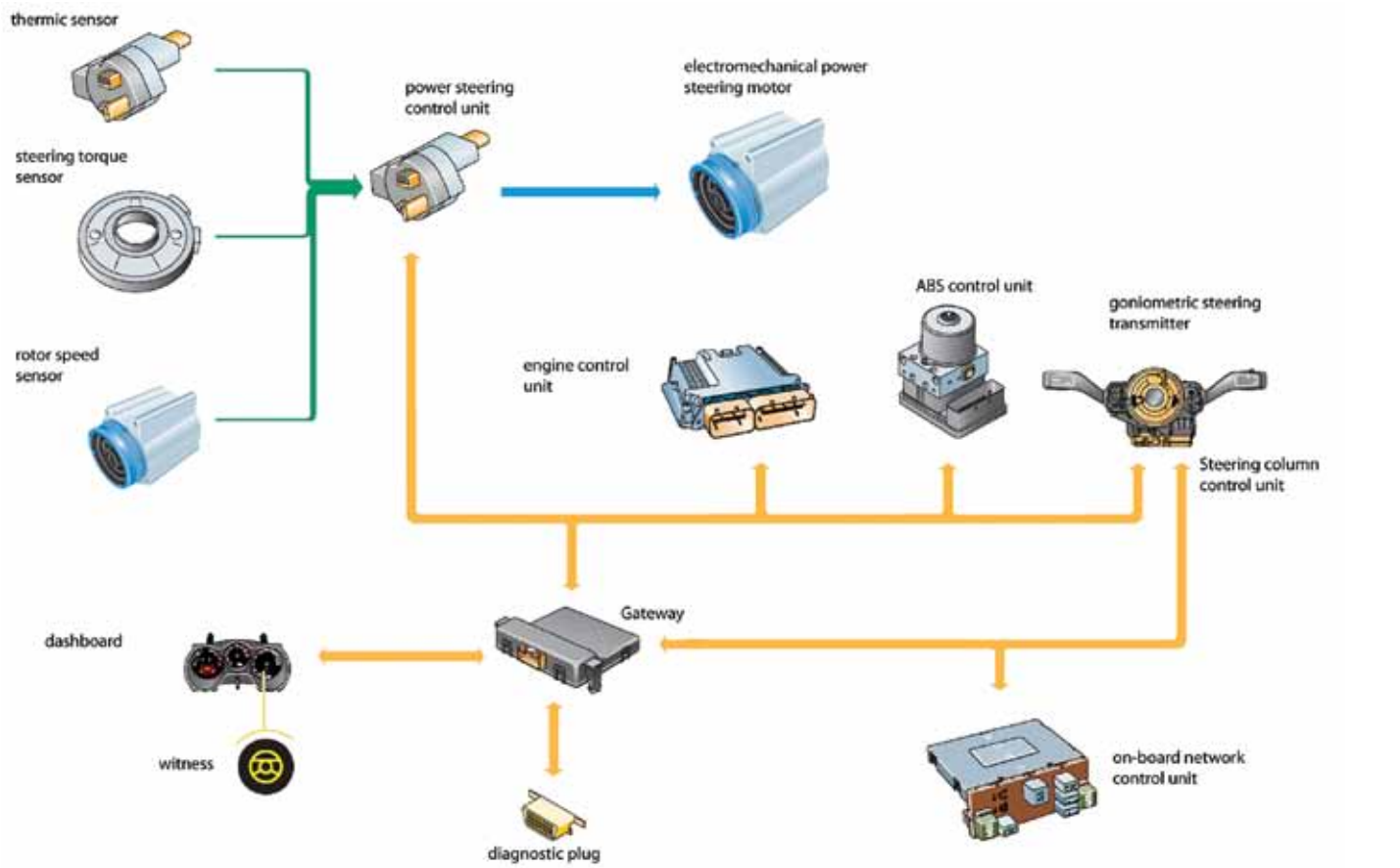

Steering torque sensor

This is normally housed inside the steering rack, mounted on the column, along with the steering pinion gear.

These functions based on magnetic-resistive principles and consists of a magnetic ring made up of 24 magnets with alternating polarities and an angle of 5° per pole. It also includes a dual sensor that is sensitive to variations in the magnetic field.

Mechanically, the pinion gear consists of three parts: shaft, spiral bevel gear, and torsion bar.

(1) The magnetic ring of the sensor is located on the shaft.

(2) The spiral bevel gear is mounted on the top of the shaft and meshes with the steering rack at the bottom.

(3) The dual sensor is located at the top end of the gear.

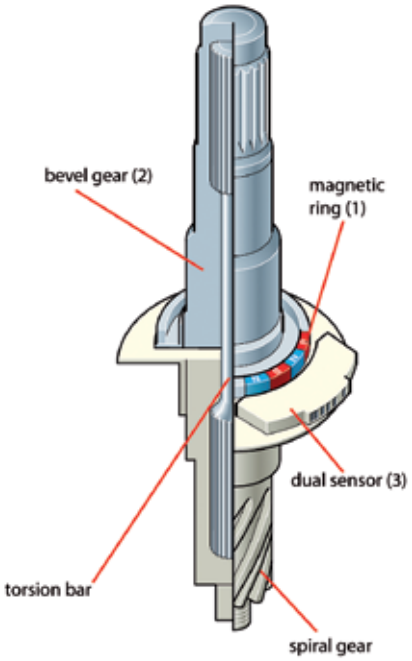

The sensor detects the offset angle of the torsion bar with respect to the intermediate shaft.

The offset determines the torsion deformation, creating a torque signal that is proportional to the generated torsion, which is then sent to the steering control unit.

Steering angle sensor

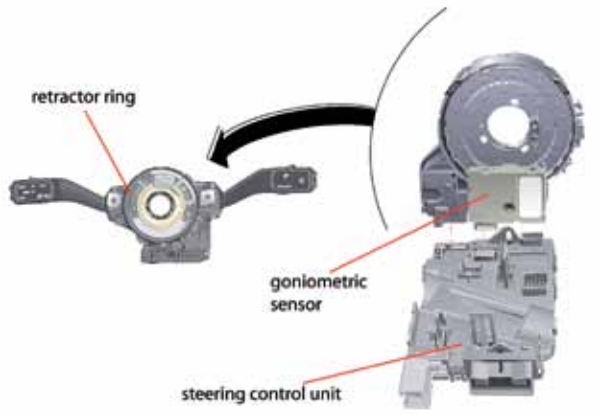

This sensor is installed on the steering column and the signal that it generates is managed by the steering column control unit to calculate the angle and turning speed of the steering wheel.

It is a goniometric sensor that operates based on light barrier principles. The sensor is made up of two coded rings, seven light sources, and seven optical sensors, and control electronics.

Each position of the steering wheel corresponds to an angular sector of the rings, which will allow the beam of light emitted by each light source to be detected by the corresponding optical sensor, which generate a current voltage.

The steering column's control unit transforms the signal into binary messages, which are sent over the multiplexed network to be used by the steering control unit for the power steering as corrective signals.

Steering control unit

It is normally secured to the steering rack block, forming a unit with the electric motor. It has two sensors inside: a thermal sensor and another sensor for rotor revolutions. The thermal sensor constantly verifies the temperature of the final power stage to protect it in case of excessive temperature.

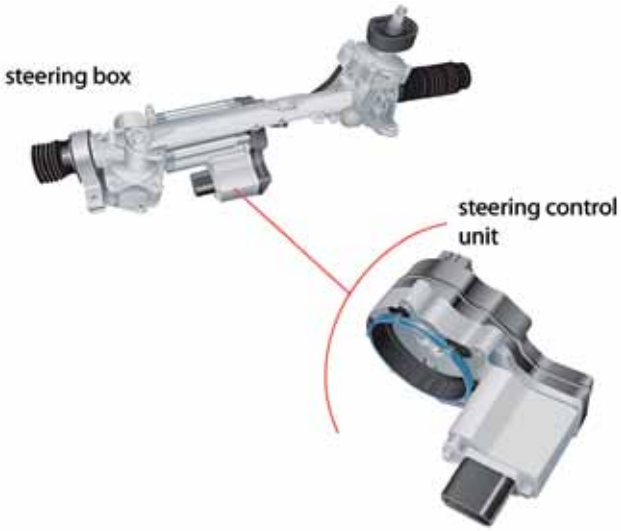

The revolutions sensor knows the actual revolutions of the rotor at any given time. This parameter is important to allow the control unit to determine the excitation of the electric motor with greater precision.

The steering control unit communicates via CAN-BUS with the other units that are involved in the proper functioning of the steering assistance. It evaluates and corrects each situation of the vehicle's movement, adjusting the user's demands with the maximum degree of precision.

In the case of malfunctions or failures in the power steering system, the user will be alerted to the severity of the malfunction by an indicator light. In the case of minor malfunctions, the indicator will be yellow, and red if the malfunction is more serious and the user should go immediately to a repair shop.

Active return

When the user stops applying force to the steering wheel, the torsion bar relaxes proportionally and the assistance magnitude decreases. To carry out this function, the control unit recognizes the parameters applied in the degree of assistance.

Depending on the steering return speed applied by the user and the speed of the vehicle, the return torque that the electric motor must contribute to allow the wheels to return to their original position in the straight driving position is calculated.

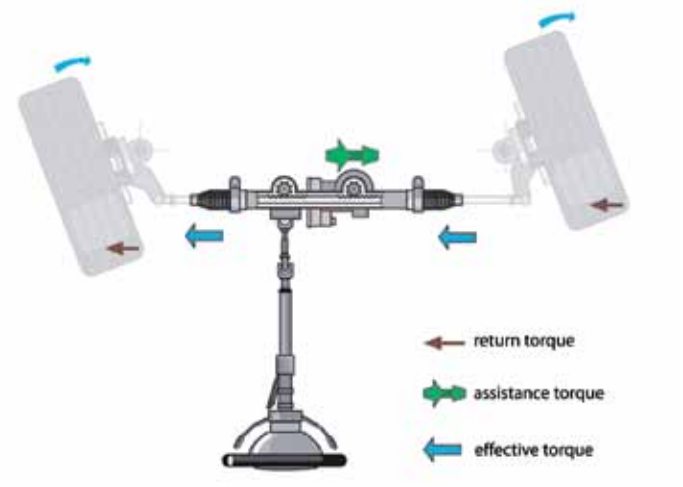

Straight driving correction

In order for the wheels to recover the straight driving position automatically, servo-assisted torque is applied provided that there are no moments of force applied to the steering wheel, restoring the initial position.

To avoid breakage or malfunctions in the steering system caused by the "mechanical end stop", the control unit limits the assistance in the 5 degrees before the end of the steering rack's range of movement.

Assistance on the steering column

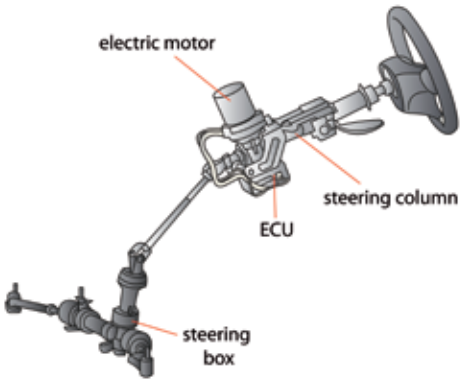

In this case, the steering assistance is located on the steering column and is generated by an electric motor. This power steering system assists the steering movements of the driver of the vehicle.

The functional principle of the system is similar to that of the system with assistance on the driving rack. It works based on the speed of the vehicle and transmits a sensation of direct steering to the user, without the influences generated by the pavement.

The system is grouped into a compact unit, which contains all of the components, such as the control unit, electric motor, torque, steering, and thermal sensors required for management. This eliminates wiring.

The gears of the electric motor are coupled to the steering column and are made of steel, as opposed to the crown gear on the steering column, which is usually made of co-stamped plastic. Both gears offer reduction with a turning ratio of 22:1.

Synoptic diagram of management for electric assistance on the steering column

Management is controlled by input and output signals that the steering control unit receives. This control unit constantly evaluates the data recorded by the sensors, whether it is the torque signal or steering angle signal. Based on this data, the control unit regulates the excitation of the electric motor, according to the level of assistance demanded by the driver.

The steering unit communicates via the CAN network with the motor control unit and the ABS control unit to adjust the steering assistance with greater precision.

If the system malfunctions, the vehicle user is informed of the malfunction and its severity by indicator lights on the dashboard.

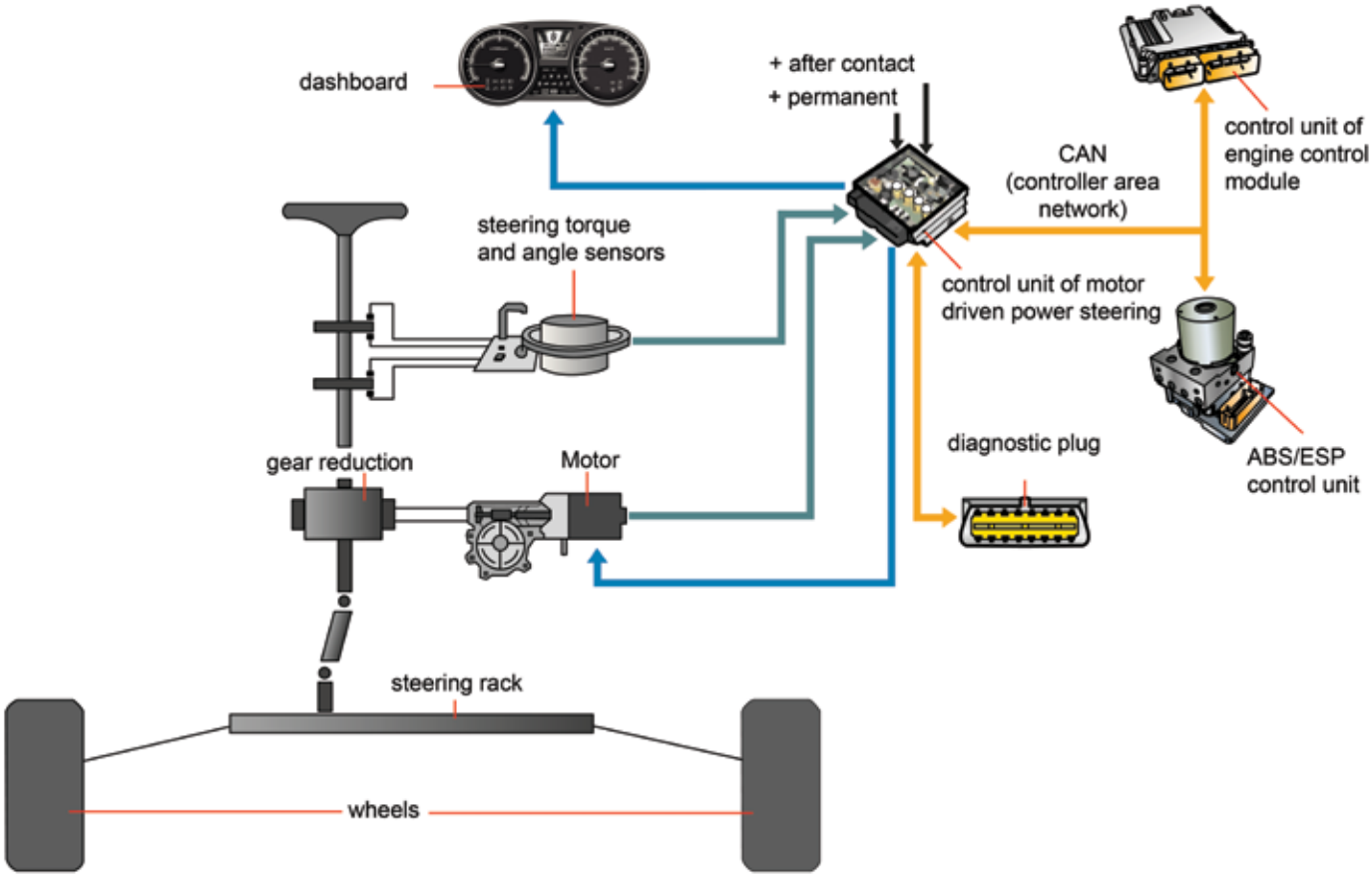

Functioning of the system

When the driver turns the steering wheel in the desired direction, an offset is generated in the torsion bar, providing the steering control unit with the signals for the magnitude of the force, the direction of the turn, and the speed applied to the steering wheel.

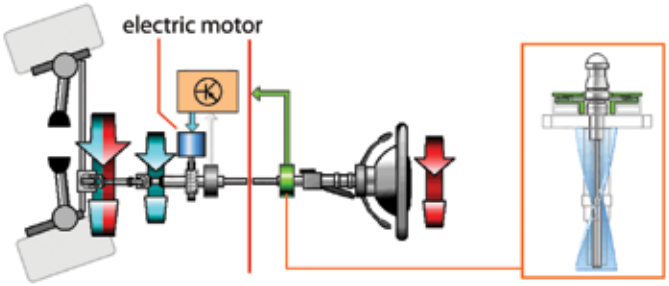

When the user increases the force applied to the steering wheel, the assistance torque supplied in the electric motor is intensified, which allows the smooth turning on the steering rack control.

In the opposite case, the offset on the torsion bar decreases and the unit corrects the excitation applied to the motor, reducing the assistance on the column.

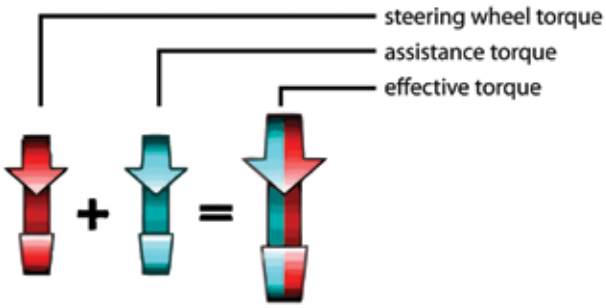

The sum of the torque applied to the steering wheel and the assistance torque is the effective torque that acts on the steering rack.

Because of the geometry of the front drive train, the wheels tend to return to the straight-line position. If the return torque is greater than the sum of the torque applied to the steering wheel and the assistance torque, the power steering system initiates the return to the straight position.

Some automobile makes provide a switch called “CITY”, which is also identified by a pictogram with a figure of a steering wheel. Its function is to make the assistance smoother by applying less effort on the steering wheel in order to facilitate manoeuvres in the most demanding situations.

STEERABLE REAR AXLES

Operating principle

In a vehicle steering system, it is advisable that assistance to the steering wheel reduces as the vehicle's speed increases, but the reduction ratio and turning radius are also very important factors.

For example, vehicles with a small reduction ratio favour low speed manoeuvres but are unsafe when travelling at speed. As regards the turning radius, vehicles with a small turning radius are best for city driving or winding roads and are easier to park, but are also not very safe at high speeds.

Some manufacturers opt for installing variable steering systems, where it is possible to change the reduction ratio of the rack or the turning radius. Nevertheless, none of these systems has allowed the turning radius to be reduced at the same time as improving the dynamic safety of the vehicle. This is due to the steering being mounted on the front axle, which produces more body roll due to inertial movement and means that suspension must be very stiff if stability is required, and the level of comfort will also be lost.

To largely solve this problem, some models are equipped with four wheel steering trains, in which the steerable rear axle assists in the driving of the vehicle, provides reliability and safety and allows a more flexible suspension system to be installed to increase ride comfort.

In this system, the turning angle of the rear wheels varies depending on the speed of the vehicle, assisting the driver in taking the correct trajectory instantaneously. At high speeds, the rear wheels turn in the same direction as the front wheels, reducing roll on curves and improving safety without the need to use very stiff suspension. Conversely, at low speed, the rear wheels steer in the opposite direction to the front wheels, reducing the turning angle and helping manoeuvres on closed curves.

In either case, the turning movement of the rear wheels is small in order to prevent, in case of a defect in the system, possible losses of traction that could cause an accident, but sufficient to clearly improve the behaviour of the vehicle in curves.

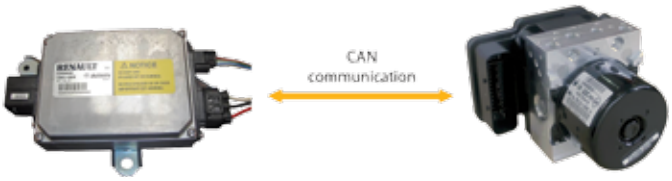

The system can operate together with other safety systems by activating the rear wheel steering to stabilise the vehicle in low grip conditions. In these situations, the stability control system control unit delays its activation and only intervenes when required, while the driver does not need to move the steering wheel to maintain the trajectory.

Renault 4Control system

One of the newest four wheel steering systems is that used by the French

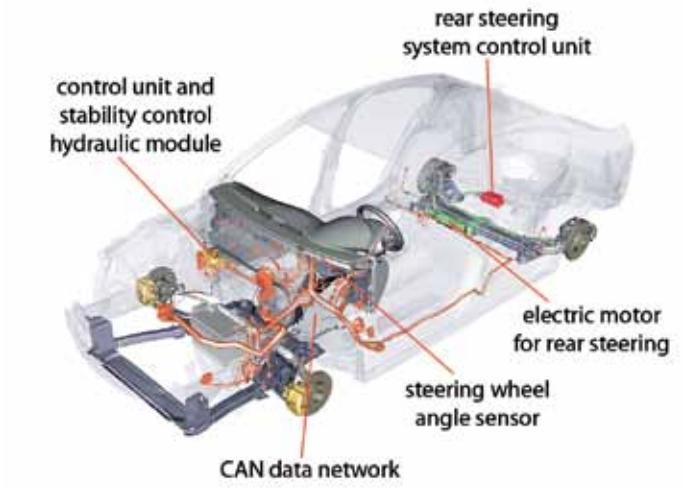

brand Renault, called 4Control. For its operation, there is an electric motor located next to the rear axle which actuates, through a joint, the partial turning of the rear wheel steering knuckles.

The rear steering system control unit is responsible for actuating the steering on the rear axle in accordance with the different data that it receives as well as specific mapping that it has available. It has three connections:

1. Connection with the vehicle installation. Power and communication is received through the vehicle's multiplexing network.

2. Connection with the actuator for sensor information.

3. Connection with the actuator for operation of the electric motor.

The steering direction and angle basically depend on the turning of the steering wheel and speed of the vehicle. This latter data is vital, as the turning of the rear wheels is actuated in one direction or another depending on the vehicle's speed. The instantaneous dynamic data is also very important. This involves comparing and memorising successive movements of the steering wheel over time, so that the style of driving or the type of curves in the road can be determined, or even if a movement is made to avoid an obstacle.

Once the necessary direction and angle are determined, the 4Control control unit activates the actuator located on the rear axle. This is attached by one side by means of a tie rod to one end of the suspension axle, while the other end is attached to a tilt system at the centre of the suspension axle. This component is attached by the other side to the two steering arms that go to the steering knuckles.

The fastening of the actuator to the end of the axle is achieved by means of a rubber bushing, while on the tilt system side it is fastened with a double ball joint. A rubber bushing joint is fitted to the top of the steering knuckles with a ball joint at the bottom.

The actuator is made up of an electric motor, an absolute position sensor that provides information on the initial position of the system, and three Hall effect relative position sensors that the control unit uses to determine the position of the motor when it is in operation. When the electric motor is running, it turns a worm drive which extends or withdraws the actuator in order to move the tilt system and, consequently, transmit the turning angle to the wheels through the steering knuckles.

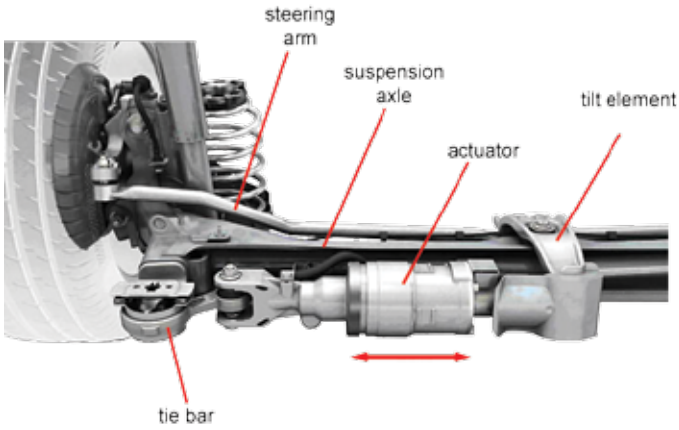

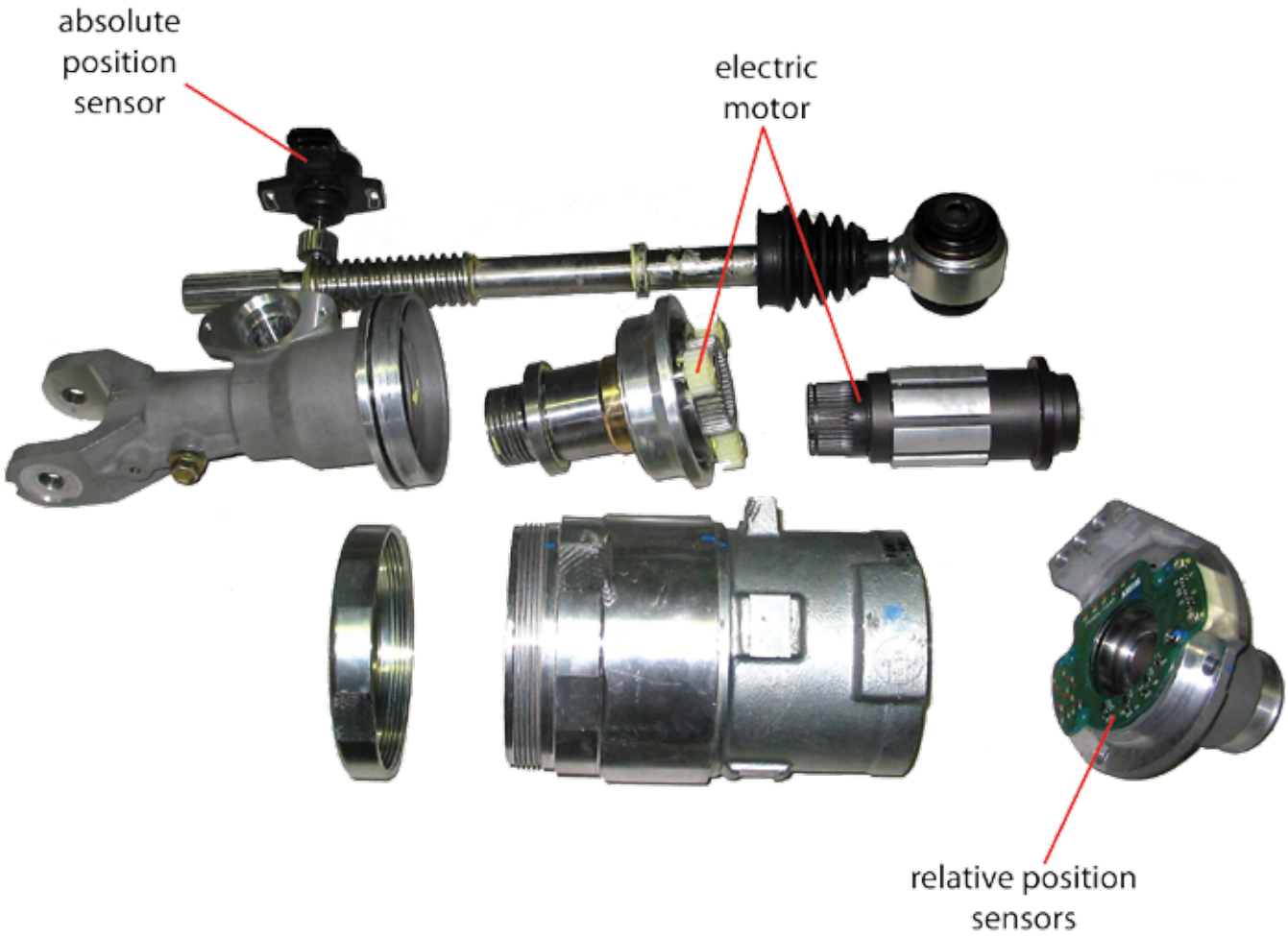

COMMON FAILURES

All steering system components and parts are constantly subjected to different loads due to pressures and temperatures produced while the vehicle is being driven. After the vehicle has driven many kilometres, the mechanical parts of the steering system may loosen, tighten, or even break, causing it to fail.
The most frequent failures depend on the type of power assistance used in the steering system.

Hydraulic power steering with mechanical action

Rotary-vane pumps have a tendency to tighten or seize up due to high temperatures inside the pump. These high temperatures are caused by friction between parts, causing them to wear. Using the wrong type of oil when maintaining the system can produce this problem.

When this type of failure occurs, the pump transmission parts must be checked, as well as the engine auxiliary belt mechanisms, i.e. the idler pulleys, rollers, and even the tensioners.

Check that the fluid pressure at the pump outlet is as indicated by the manufacturer. If the pressure is too high, the fault originates in the internal pressure regulator, which is not correctly regulating the working pressure. If the pressure is low, the fault originates in the pressure adjuster, which is not creating the correct internal pressure due to it being too loose or too tight. In some pumps, the pressure regulator is an external adjuster and is controlled electronically.

Hydraulic pumps can be repaired. Manufacturers can supply the necessary replacement parts. If the type of failure means that repair is not possible, the whole pump must be replaced.

Electrically powered hydraulic steering

The electric motor that drives the hydraulic pump may cause problems in the long term. The pump may stop functioning, or it may function, but provide insufficient power, or it may function sporadically.
In addition, noise coming from inside the electric pump can alert us to a fault.

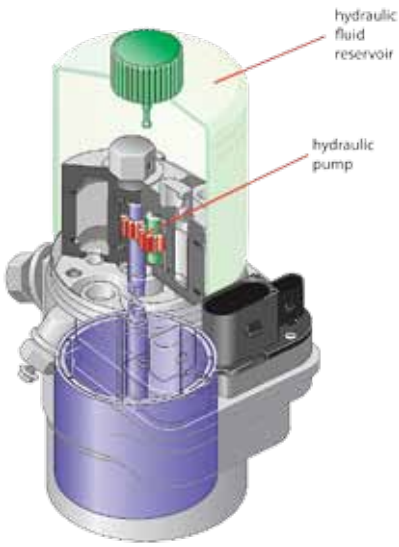

Firstly, the condition of the battery should be checked, as this type of system consumes a large amount of electricity and a low battery level may cause the system to function incorrectly.

Communication between the steering control unit and the engine control unit must be stable. The steering control unit needs to communicate with the sensors used in the engine management system. To check that these components are communicating correctly, a test is performed using a diagnosis machine.

Sometimes, the sensors in the electric pump/unit assembly may cause instable functioning as they have been incorrectly read. They are checked using a diagnosis machine.

In many cases the electric pump assembly cannot be repaired and has to be replaced. There may be local specialist companies which repair faults in electric pump assemblies.

Electric power steering with rack and pinion

The most common failures are: stiff steering due to a failure of the power steering system, a power steering system that functions when steering in one direction but not in the other, and a system that only functions sporadically.

An electric motor located in the steering rack and pinion may lose power if it does not have a sufficient power supply, if there are connection faults, or if the sensors are not being read correctly (either the steering angle sensor or one of the pair located on the torsion bar). Other failures produce internal noise in the rack and pinion due to looseness of the mechanical elements.

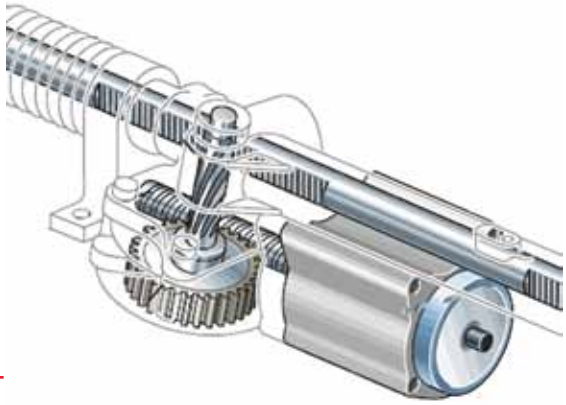

It is important to first check the battery and the system connections and to ensure that they have the correct voltage. If the voltage is lower than the specified limits, the electric motor will not supply sufficient power during the turning manoeuvre.

It is necessary to check using diagnosis that the sensors' readings are within the parameters specified by the manufacturer. It is also important to check that communication between the steering unit and the motor unit is stable.

Lastly, check that noise is not produced inside the steering rack and pinion when the steering system is operating.

If the battery has a charge lower than that specified, it should be replaced with a new battery.

Specialised technicians can repair these systems, either by repairing the control unit at an electronic level, or using computerized updates.

Electric power steering in the column

The failures in these systems are similar to those of electric power steering with rack and pinion. Common failures are: sporadic power steering while the vehicle is being driven, stiffer steering in one direction than the other, and that the power steering stops functioning, but works again when the vehicle is restarted.

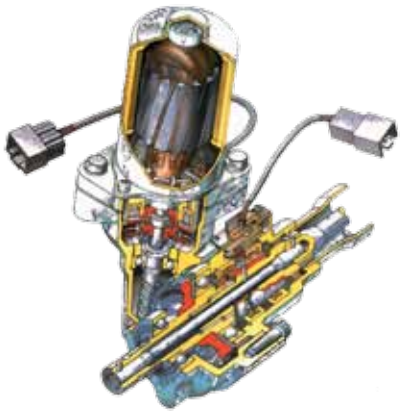

Check that the power supplied to the system is as indicated by the manufacturer and there that are no falls in voltage during power steering.

Diagnosis is performed using a diagnosis machine, which checks that the data recorded by the sensors is within the parameters established by the manufacturer.

Communication between the steering control unit and the engine control unit is carried out by the multiplexing circuit. It is important to check there is good communication between them.

Lastly, check that noise is not produced inside the steering rack and pinion when the steering system is operating.

If the voltage levels are low, check the battery and replace it if necessary. Also check the voltage produced by the alternator. If it is not at the correct level, there is a problem with the battery charging system which must be rectified.

These power steering systems can be repaired by specialists. The most common solutions are often repairs to control units, i.e. repair of an electronic component or software updating.

TECHNICAL NOTES

The technology applied in today's steering systems is growing increasingly complex. When repair shops receive cars with malfunctions, they are unable to resolve or even diagnose them due to lack of resources, especially technological ones. Multi-make auto repair shops often send the vehicles to the official service centres to solve the problem.

Depending on the group or make, the number of malfunctions over the years can be considerable. The following are some of the most common malfunctions that occur in steering systems.

These malfunctions were selected from the online platform: www.einavts.com. This platform contains a series of sections that specify: make, model, line, system affected and subsystem, which can be selected independently depending on the desired search.

VAG GROUP

AUDI, SEAT, SKODA, VW	
Symptoms	03375 - Steering motor. 16352 - Control unit. 00003 - Control unit. 03375 - Steering motor. Mechanical failure. 00573 - Steering moment sensor. - G269. Electric steering system warning light lit. 00566 - Steering assistant. Mechanical failure. Fault codes recorded in the electronic power steering module (EML). Yellow warning light for power steering lit. Red warning light for power steering lit. Steering is stiff.
Cause	Defective configuration of the software of the electronic power steering (EML) control module - J500.
Solution	Reprogram the electronic power-steering control module (EML) - J500 with updated software. Replace the control module of the electric steering. Enter the correct parameters that are indicated on the CD included in the electric steering control module pack, using the proper diagnostic tool.

VAG GROUP

AUDI, SEAT, SKODA, VW	
Symptoms	01309 - Power-steering control unit. -J500. Fault code recorded in the control module of ESP/ABS brakes after the power-steering control module is replaced.
Cause	Internal fault in the power-steering control module software.
Solution	Reprogram the power-steering control module with updated software.

HYUNDAI

HYUNDAI ACCENT III (MC), ELANTRA Sedan (HD), GETZ (TB), i10/i20/i30	
Symptoms	C1603 - Reduction of thermal protection of the EPS. Steering is rigid or very stiff. Power steering system (EPS) warning light lit.
Cause	Possible causes: - Overheating of the electric motor of the power-steering box. - Overheating of the power supply relay of the power-steering electric motor. - Failure in the power-steering motor control module (ECU). - Excessive wear of the carbon brushes, which generates a paste that adheres to the walls of the contact part with the induced (copper material) causing deficient performance of the electronic power-steering motor
Solution	Replace the electric motor of the power-steering box with a modified new one. Replace the control module of the power-steering motor (ECU). See images: A - Electric power-steering motor. B - ECU. Steering control module. C - The entire carriage, in addition to the steering bar and electric motor, must be disassembled. D - Steering motor control unit. IMPORTANT: Due to the cost of disassembly and assembly of the repair, it is advisable to prepare an estimate first if only the brushes need to be replaced or if there is some type of incorrect wiring or connection.

PSA GROUP

CITROËN C4 (LC_), C4 Picasso (UD_), PEUGEOT 307 (3A/C)	
Symptoms	C1210 - Functional failure of the electric motor. Incorrect functioning of the steering system, steering becomes stiff sporadically.
Cause	Possible causes: Rust on connectors. Electro-pump malfunction. Defect in installation.
Solution	Repair procedure: Check the electro-pump connectors for signs of rust or sulphate. - Verify whether or not there is power to the steering electro-pump at the moment of the malfunction. - Install (temporarily) 2 LEDs or bulbs in view of the driver. - 1st LED: On the black two-lead connector.- Take the positive of pin n° 1 and the negative of pin n° 2 (pin n° 1 is a battery positive from the motor service box (BSM) through the maxi-fuse MF8). - 2nd LED: On the black nine-lead connector.- Take the positive of pin n° 5 and use the negative of LED n° 1 (pin n° 5 is a contact positive from the motor service box (BSM) through an integrated micro-relay R6 and protected by fuse F7. - At the moment of the malfunction, verify whether the LEDs have been lit continually, in which case, replace the electro-pump. - At the time of the malfunction, verify whether any of the LEDs turn off; in this case, examine the installation or the motor service box (BSM) until the malfunction is located. NOTE: If the vehicle is equipped with an ABS - ESP system, make a diagnosis. For more information, contact your normal technical assistance provider. See image 1: - Location of the motor of the power steering electronics set. See image 2: - Diagram of tracking of the previous application. - BB00.- Battery. - PSF1. - Motor relay and fuse box (BSM). - 7122. - Power steering electro-pump set. - 7130. - Steering angle sensor (steering wheel). Multiplexed. - C001. - Diagnostic tool connector. - ESP. - Electronic Motor Control Unit for the braking control system.

PSA GROUP

PEUGEOT 308 (4A_, 4C_)	
Symptoms	P0602 - Motor control unit, programming error. Inoperative function of steering assistance. NOTE: This error appears after a procedure in the workshop to replace the piloted electric steering set.
Cause	Fault in the software of the control unit of the piloted electric steering.
Solution	Repair procedure: - Use the diagnostic tool to take a reading of the fault codes recorded by the control unit of the piloted electric steering. - Use the diagnostic tool to delete the fault codes recorded by the control unit of the piloted electric steering. - Reprogram the control unit of the piloted electric steering with updated software.

PSA GROUP

PEUGEOT 308 (4A_, 4C_)	
Symptoms	C1301 - Brake pressure sensor. C1388 - Learning of steering wheel angle value. U1105 - Lack of communication with steering wheel angle sensor. Error codes recorded in the ABS-ESP control unit. Malfunction indicator of the ESP system lit. Inoperative function of the ESP system.
Cause	The cable bundle from the brake pedal switch is rubbing against the steering column.
Solution	Repair procedure. - Repair or replace the brake switch installation. - Correctly position the cable bundle so that it is as far as possible from the steering column. - For more information, contact your normal technical assistance provider.

OPEL

CORSA C (F08, F68), MERIVA, TIGRA	
Symptoms	Clicking noise in steering while driving.
Cause	Excessive play in the steering box bushing.
Solution	Replace the “A” bushing with a new one, located where the axle exits the steering box “B” (see image). The manufacturer provides a repair kit. For spare parts, consult your normal distributor. For more information, contact your normal technical assistance provider.

The most common solutions in the repair of the steering system are based on updating of software, replacement of the electric motor, replacement of the entire electric motor/unit module.

an eye on automotive technology

The Eure!TechFlash newsletter is complementary to ADI's training program Eure!Car and has a straightforward mission :

to provide up-to-date technical insight in innovations within the automotive environment.

With technical assistance of AD Technical Centre (Spain) and assisted by the leading parts manufacturers, Eure!TechFlash aims to demystify new technologies and make them transparent, in order to stimulate professional repairers to keep pace with technology and to motivate them to continuously invest in technical education.

Eure!TechFlash will be issued 3 to 4 times a year.

Eure!Car®
CERTIFIED MASTERCLASSES

The technical competence level of the mechanic is vital, and in the future may be decisive for the continued existence of the professional repairer.

Eure!Car is an initiative by Autodistribution International, with headquarters in Kortenberg, Belgium (www.ad-europe.com). The Eure!Car program contains a comprehensive series of high-profile technical trainings for professional repairers, which are given by the national AD organizations and their parts distributors in 32 countries.

Visit **www.eurecar.org** for more information or to view the training courses.

industrial partners supporting Eure!Car

BOSCH · Continental ContiTech · EXIDE TECHNOLOGIES · FEDERAL-MOGUL MOTORPARTS · Gates · HELLA · INA · KYB · LuK · MANN FILTER – Perfect parts. Perfect service. · NGK · PHILIPS · SKF · TENNECO · TRW · Valeo · VARTA · ZF

NEXT

Climate control